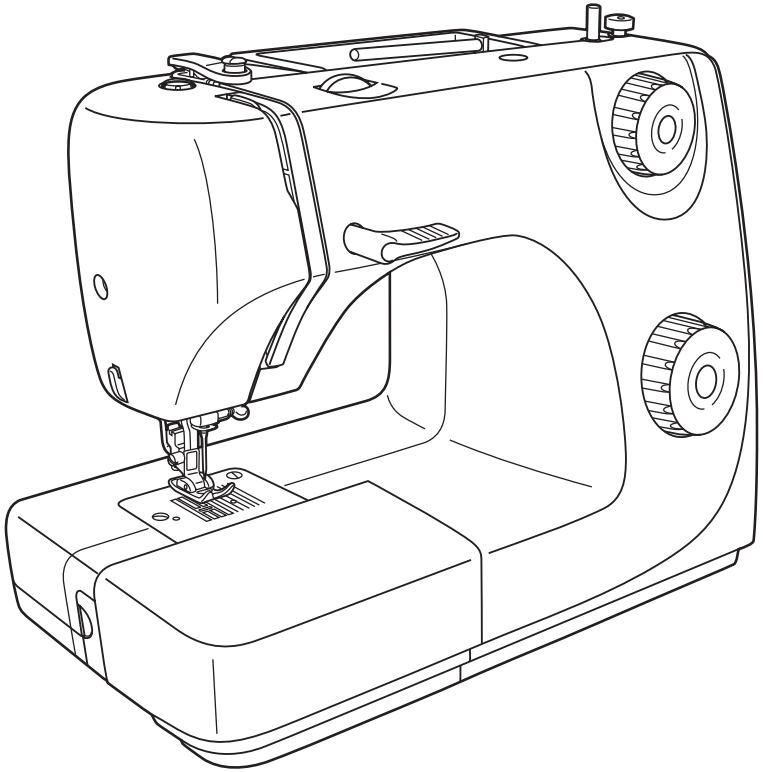

SINGER®

Instruction Manual

IMPORTANT SAFETY INSTRUCTIONS

When using an electrical appliance, basic safety should always be followed, including the following:

Read all instructions before using this sewing machine.

DANGER- To reduce the risk of electric shock:

1. An appliance should never be left unattended when plugged in.
2. Always unplug this appliance from the electric outlet immediately after using and before cleaning.
3. Always unplug before re-lamping. Replace bulb with same type rated 10 watts (110-120V area) or 15 watts (220-240V area).

WARNING-To reduce the risk of burns, fire, electric shock, or injury to persons:

1. Do not allow to be used as a toy. Close attention is necessary when this appliance is used by or near children.
2. Use this appliance only for its intended use as described in this manual. Use only attachments recommended by the manufacturer as contained in this manual.
3. Never operate this appliance if it has a damaged cord or plug, if it is not working properly, if it has been dropped or damaged, or dropped into water.

   Return the appliance to the nearest authorized dealer or service center for examination, repair, electrical or mechanical adjustment.
4. Never operate the appliance with any air openings blocked. Keep ventilation openings of the sewing machine and foot controller free from accumulation of lint, dust, and loose cloth.
5. Keep fingers away from all moving parts. Special care is required around the sewing machine needle.
6. Always use the proper needle plate, The wrong plate can cause the needle to break.
7. Do not use bent needles.
8. Do not pull or push fabric while stitching. It may deflect the needle causing it to break.
9. Switch the sewing machine off ("O") when making any adjustments in the needle area, such as threading needle, changing needle, threading bobbin, or changing presser foot, and the like.
10. Always unplug sewing machine from the electrical outlet when removing covers, lubricating, or when making any other user servicing adjustments mentioned in the instruction manual.
11. Never drop or insert any object into any opening.
12. Do not use outdoors.
13. Do not operate where aerosol spray products are being used or where oxygen is being administered.
14. To disconnect, turn all controls to the off ("O") position, then remove plug from outlet.
15. Do not unplug by pulling on cord. To unplug, grasp the plug, not the cord.
16. The sound pressure level under normal operating conditions is 75dB(A).

SAVE THESE INSTRUCTIONS

This sewing machine is intended for household use only.

Congratulations

As the owner of a new Singer sewing machine, you are about to begin an exciting adventure in creativity. From the moment you first use your machine, you will know you are sewing on one of the easiest to use sewing machines ever made.

May we recommend that, before you start to use your sewing machine, you discover the many advantages and the ease of operation by going through this instruction book, step by step, seated at your machine.

To ensure that you are always provided with the most modern sewing capabilities, the manufacturer reserves the right to change the appearance, design or accessories of this sewing machine when considered necessary.

® Singer is a registered trademark of The Singer Company Ltd or its affiliates.
Copyright © 2005
All rights reserved throughout the world.

☐ List of contents

Principal parts of the Machine 2/3
Accessories 4
Installing the snap-in sewing table 5
Connecting machine to power source 6
Changing the bulb 7
Two-step presser foot lifter 8
Adjusting presser foot pressure 8
Attaching the presser foot holder 9
Winding the bobbin 10
Inserting the bobbin 11
Inserting and changing needles 12
Threading the upper thread 13
Automatic needle threader (optional) 14
Thread tension 15
Raising the bobbin thread 16
Reverse sewing/ Remove the work/ Cutting the thread 17
Matching needle/ fabric/ thread 18
How to choose your pattern 19
Straight stitching and needle position 20
Zigzag stitching 21
Blind hem/ Lingerie stitch 22
Sewing on buttons 23
Sew 4-step buttonholes 24
Zippers and piping 25
Mutlti-stitch zig-zag/ Bar tack 26
Free motion darning, stippling 27
Decorative stitches 28
Applique and blindstitch applique 29
Quilting functions 30
Mending 31
Staystitching 32
Traditional PinTucks 33
Gathering 34
Couching 35
Maintenance 36
Trouble shooting guide 37

☐ Principal parts of the machine

1. Thread tension dial
2. Presser foot pressure adjustment
3. Thread take-up lever
4. Thread cutter
5. Presser foot
6. Needle plate
7. Removable sewing table/ accessory storage
8. Reverse sewing lever
9. Bobbin stopper
10. Stitch length dial
11. Pattern selector dial

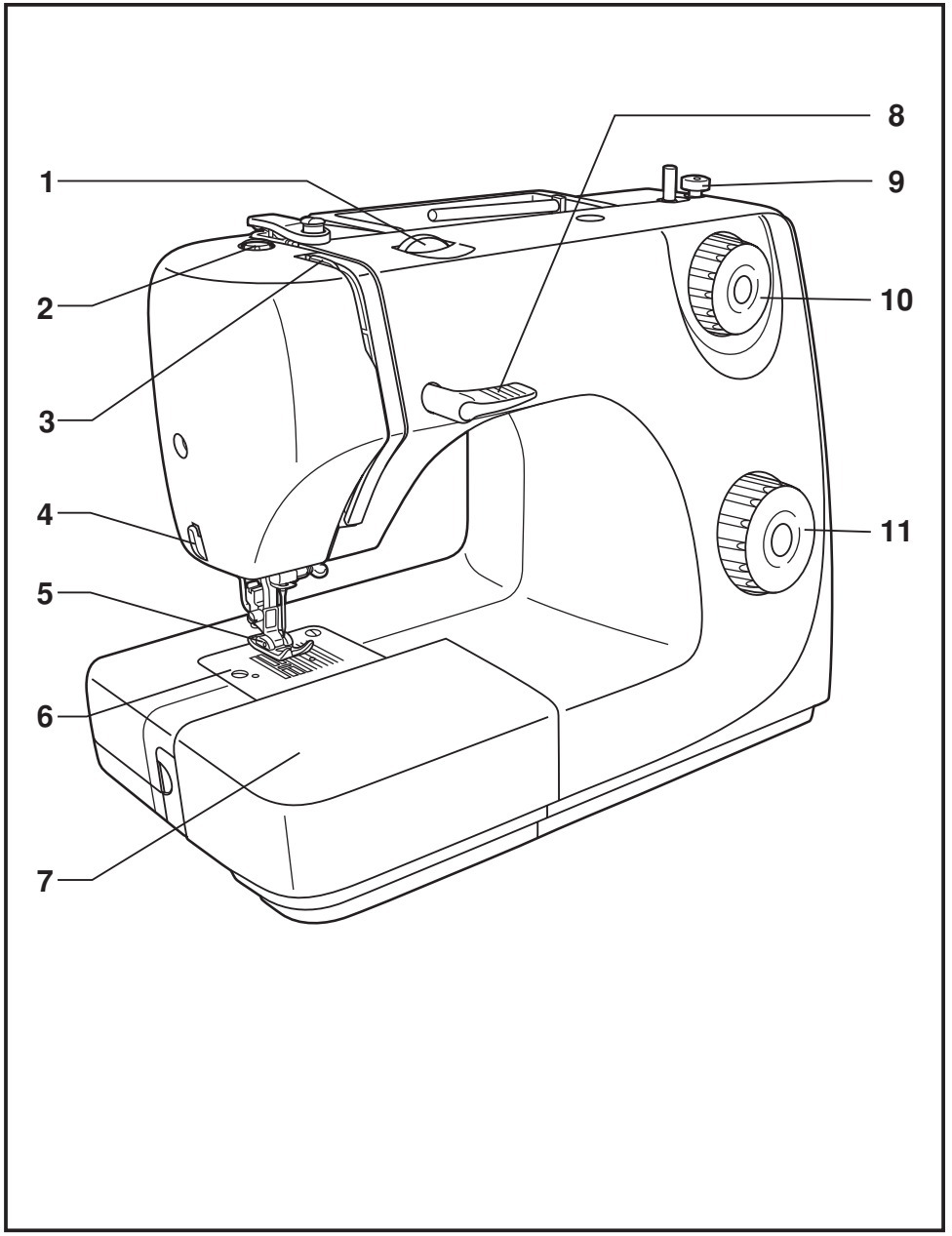

☐ Principal parts of the machine

12. Horizontal spool pin
13. Bobbin winder
14. Handwheel
15. Power and light switch
16. Main plug socket
17. Bobbin thread guide
18. Upper thread guide
19. Face plate
20. Handle
21. Presser foot lever
22. Foot speed control
23. Power cord

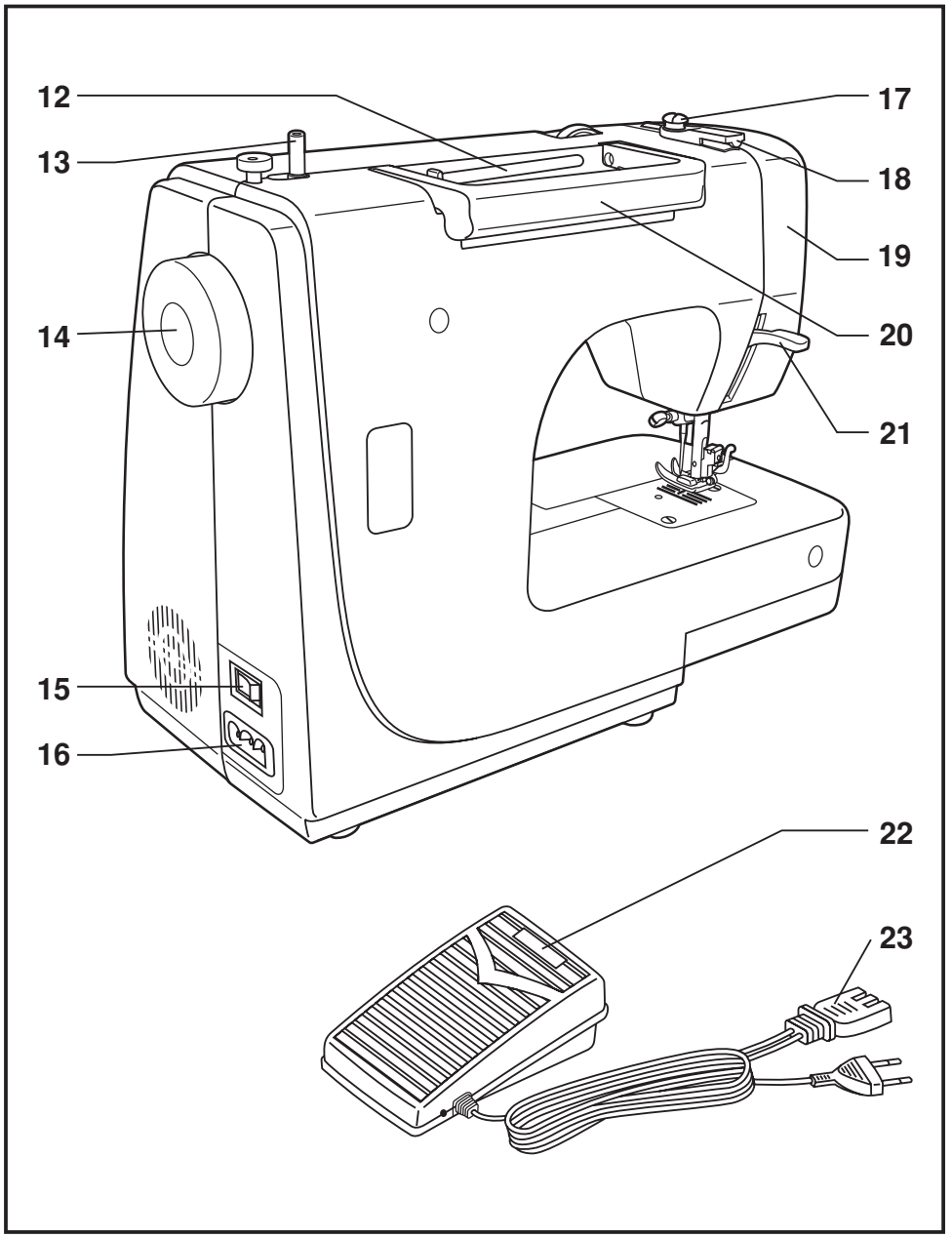

☐ Accessories

Standard accessories (1)

a. All purpose foot
b. Zipper foot
c. Buttonhole foot
d. Button sewing foot
e. L-screwdriver
f. Seam ripper/ brush
g. Oil bottle
h. Pack of needles
I. Bobbin (3x)
j. Seam guide
k. Darning plate
l. Spool holder

Optional accessories (2)

(These 6 accessories are not supplied with this machine; they are however available as special accessories from your local dealer.)

m.Quilting foot
n. Overcasting foot
o. Hemmer foot
p. Blind hem foot
q. Satin stitch foot
r. Darning foot

1

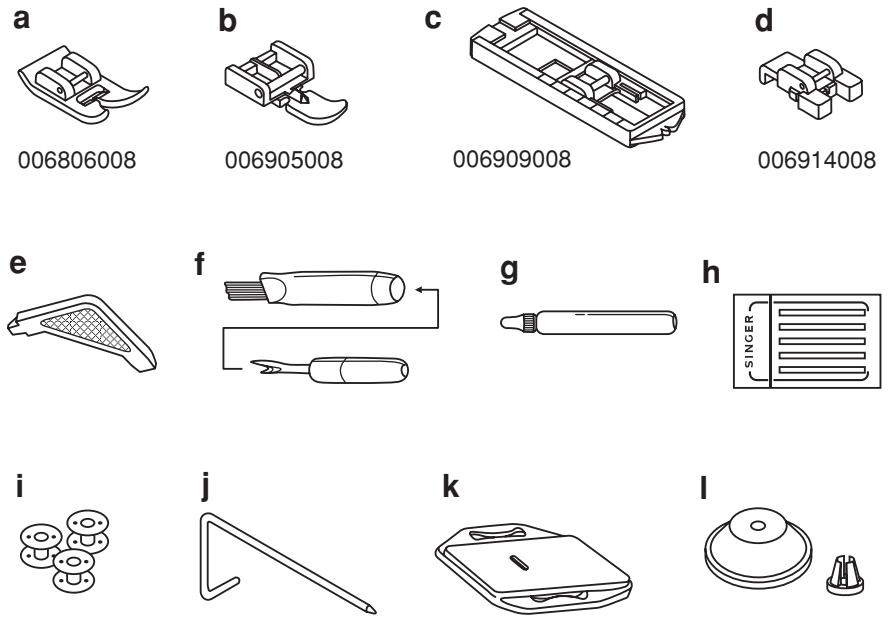

2

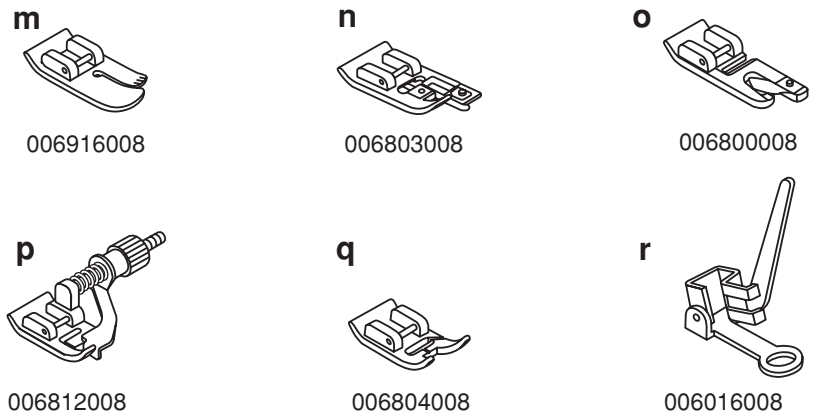

☐ Installing the snap-in sewing table

Keep the snap-in sewing table horizontal, and push it in the direction of the arrow. (1)

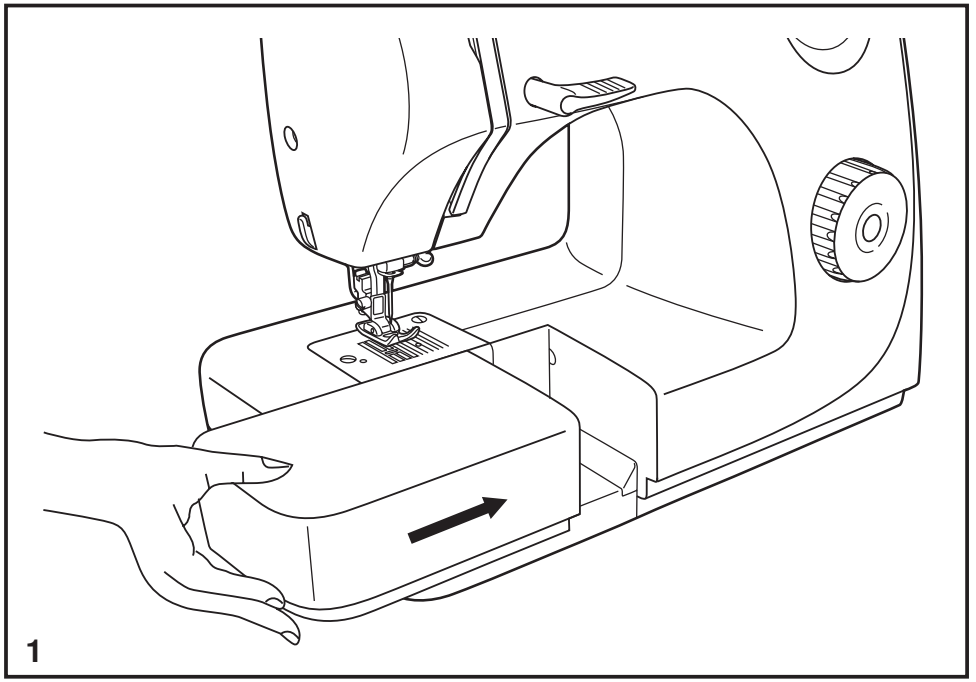

1

The inside of the snap-in sewing table can be utilized as an accessory box.

To open, lift up at the point of the arrow. (2)

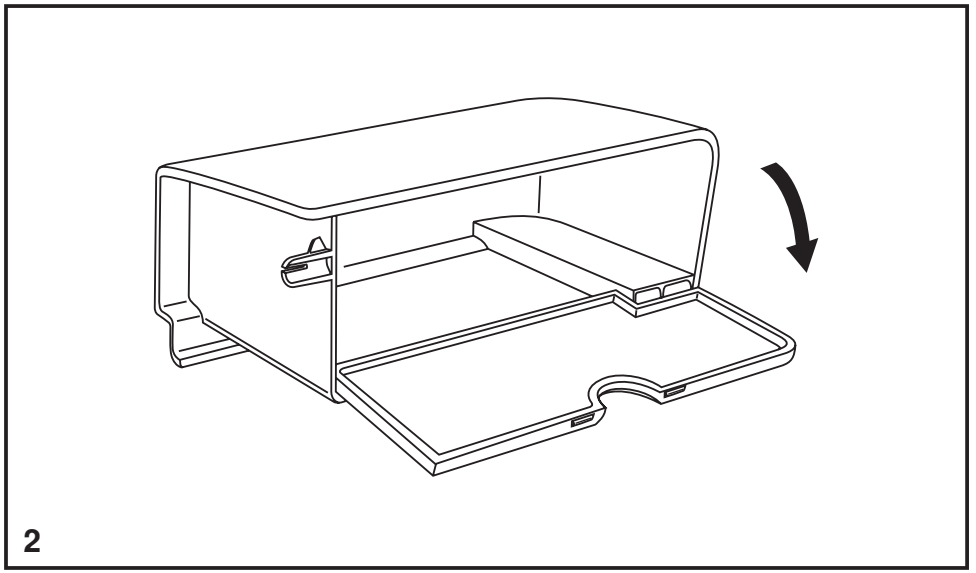

2

☐ Connecting machine to power source

Connect the machine to a power source as illustrated. (1)
This appliance is equipped with a polarized plug which must be used with the appropriate polarized outlet. (2)

Attention:
Unplug power cord when machine is not in use.

Foot control
The foot control pedal regulates the sewing speed. (3)

Attention:
Consult a qualified electrician if in doubt as to connect machine to power source.
Unplug power cord when machine is not in use.
The foot control must be used with the appliance by KD-1902 (110-120V area)/ KD-2902 (220-240V area) manufactured by ZHEJIANG FOUNDER MOTOR CORPORATION LTD. (China)

Sewing light
Press main switch (A) for power and light on " I ".

IMPORTANT NOTICE
For appliance with a polarized plug (one blade is wider than the other). To reduce the risk of electric shock, this plug is intended to fit in a polarized outlet only one way. If it does not fit fully in the outlet, reverse the plug. If it still does not fit, contact a qualified electrician to install the proper outlet. Do not modify the plug in any way.

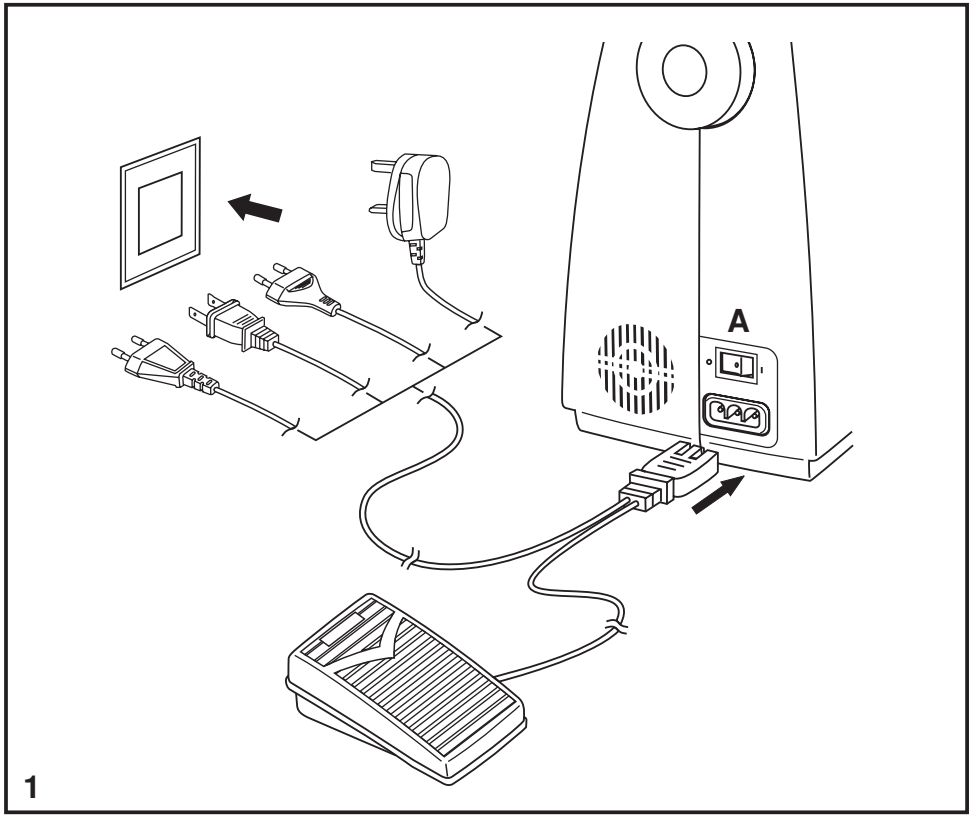

1

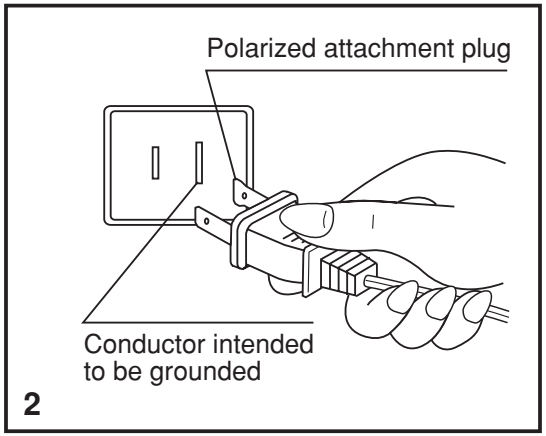

2

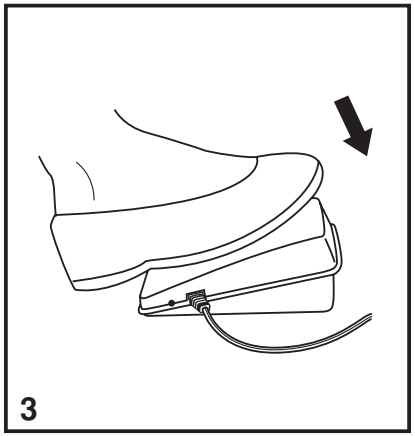
3

☐ Changing the bulb

Disconnect the machine from the power supply by removing the plug from the main socket!

Replace bulb with same type rated 10 watts (110-120V area) or 15 watts (220-240V area).

- Remove the screw (A) as illustrated. (1)

- Remove the face plate (B).

- Unscrew the bulb and install a new one (C). (2)

- Replace the face plate and tighten screw.

Should there be any problem, ask your local dealer for advice.

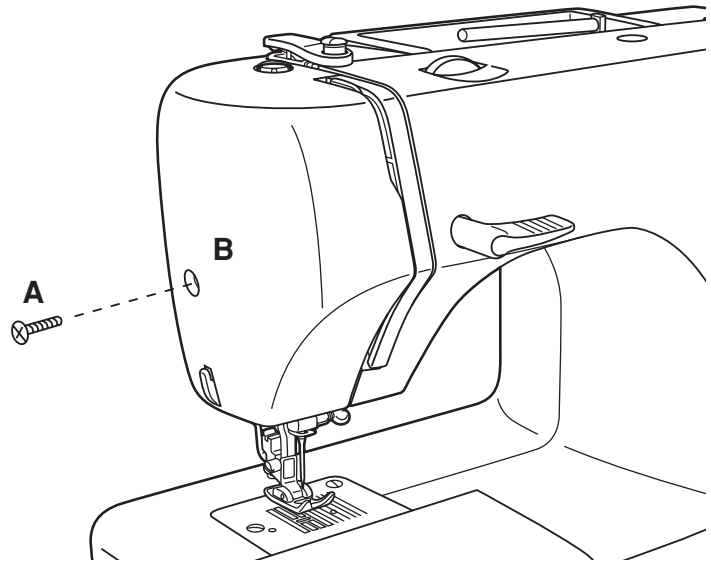

1

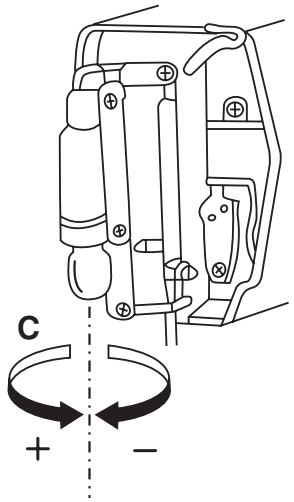

2

☐ Two-step presser foot lifter

When sewing several layers or thick fabrics, the presser foot can be raised to a high rise position for easy positioning of the work. (A)

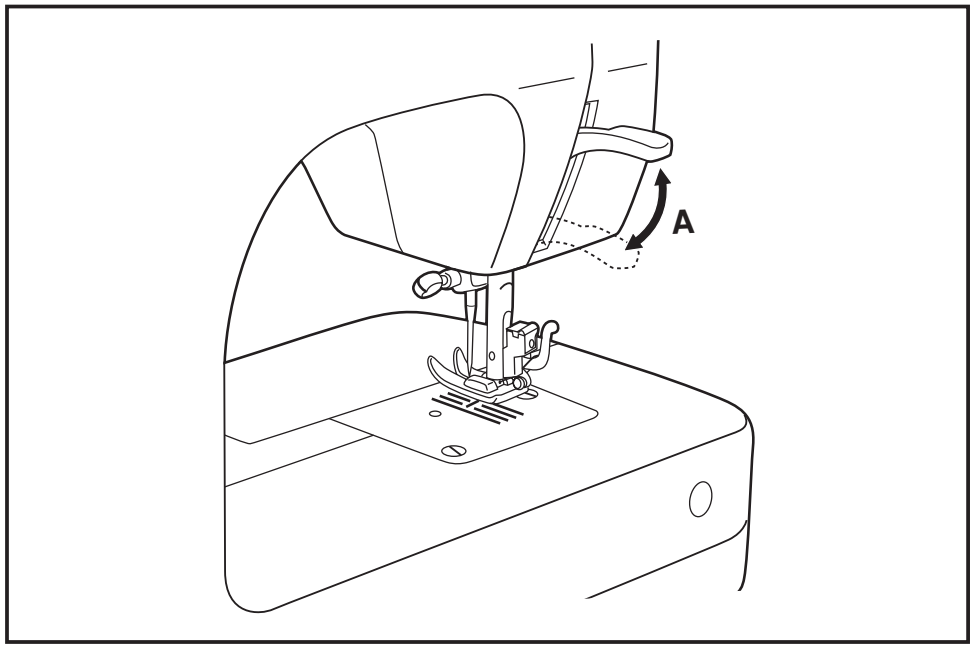

Adjusting presser foot pressure

The presser foot pressure of the machine has been pre-set and requires no particular readjustment according to the type of fabric (light-or-heavy weight).

However, if you need to adjust the presser foot pressure, turn the presser adjusting screw with a coin.

For sewing very thin fabric, loosen the pressure by turning the screw counter counterclockwise, and for heavy fabric, tighten by turning it clockwise.

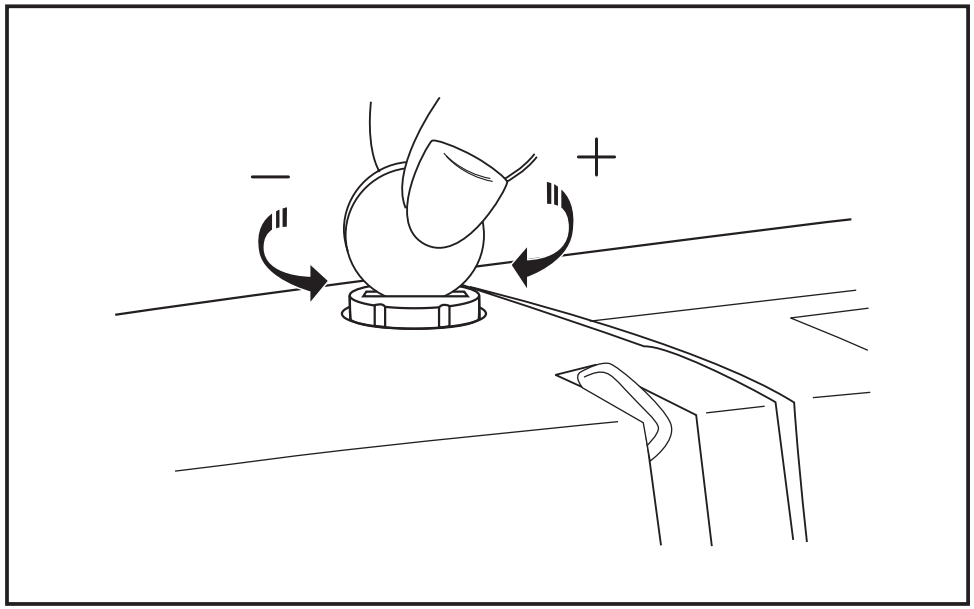

☐ Attaching the presser foot holder

Raise the presser bar (a). Attach the presser foot holder (b) as illustrated. (1)

Attaching the presser foot

Lower the presser foot holder (b) until the cut-out (c) is directly above the pin (d). (2)

Raise the lever (e). Lower the presser foot holder (b) and the presser foot (f) will engage automatically.

Removing the presser foot

Raise the presser foot. (3)

Raise the lever (e) and the foot disengages.

Attaching the seam guide

Attach the seam guide (g) in the slot as illustrated. Adjust according to need for hems, pleats, etc. (4)

Attention:
Turn power switch to off ("O") when carrying out any of the above operations!

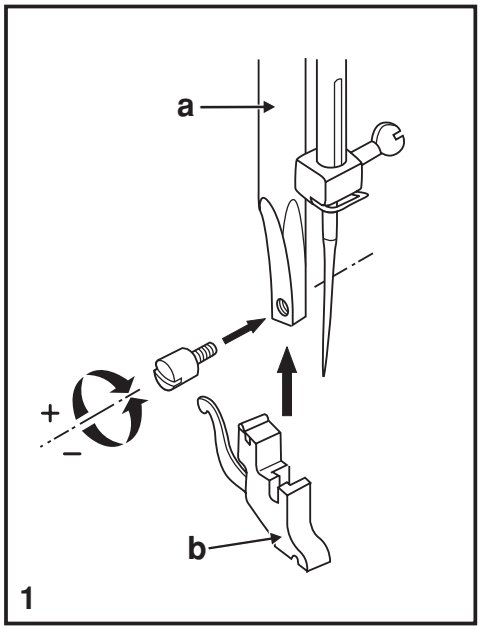

1

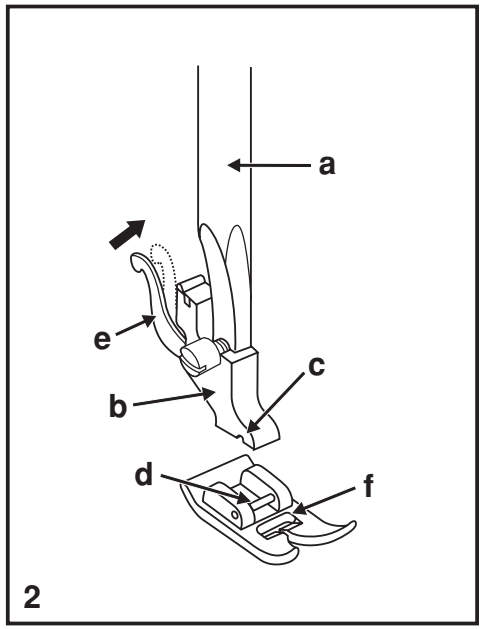

2

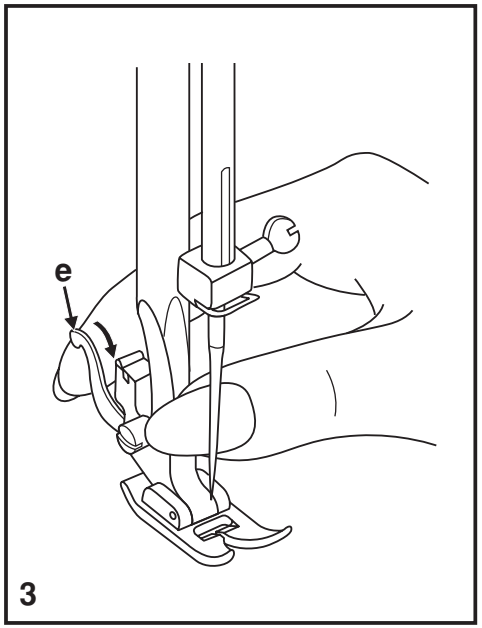

3

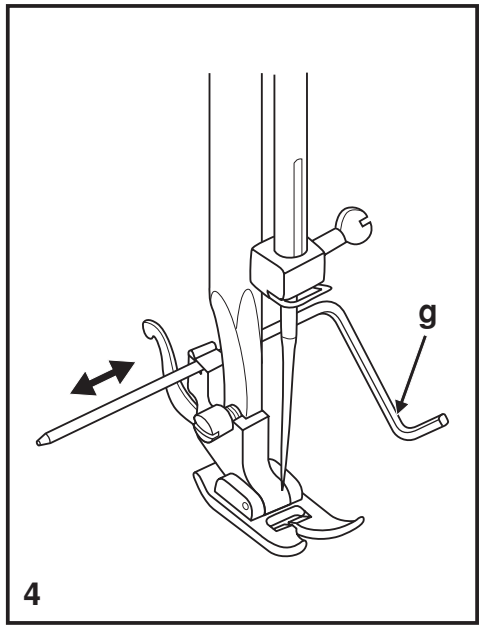

4

☐ Winding the bobbin

- Place thread and spool holder big or small spool pin. (1/2)
- Wind thread anticlockwise around bobbin winder tension discs (3).
- Thread bobbin as illustrated and place on spindle (4).
- Push bobbin to right (5).
- Hold thread end (6).
- Step on foot control pedal (7).
- Cut thread (8).
- Press bobbin to left (9) and remove.

Please Note:
When the bobbin winder spindle is in "bobbin winding" position, the machine will not sew and the hand wheel will not turn. To start sewing, push the bobbin winder spindle to the left (sewing position).

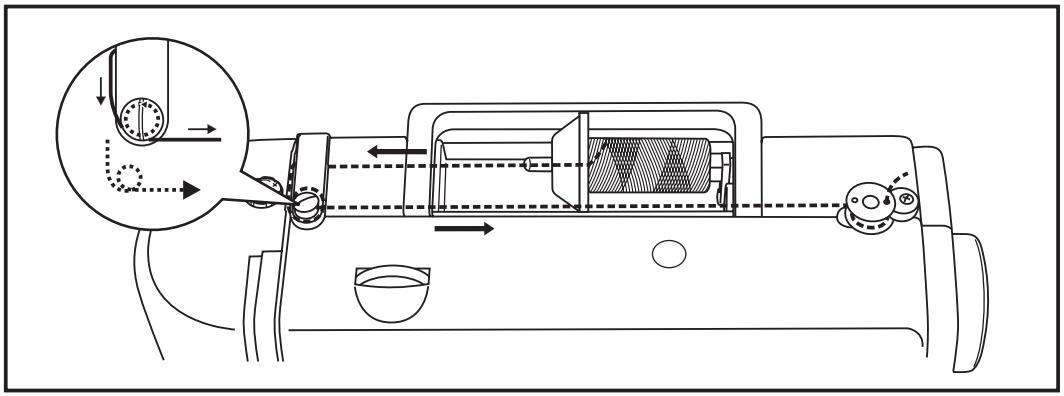

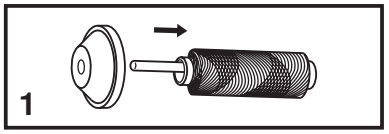

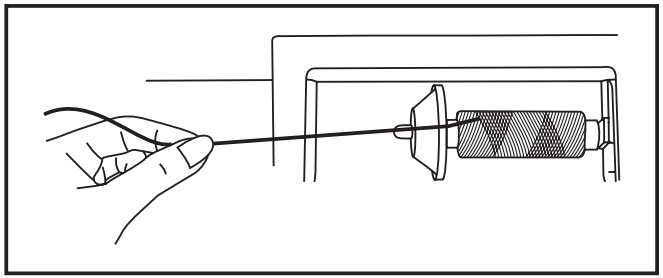

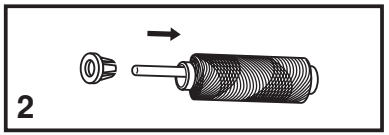

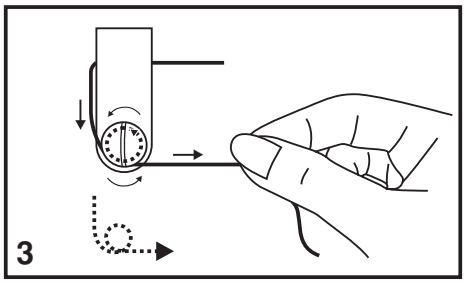

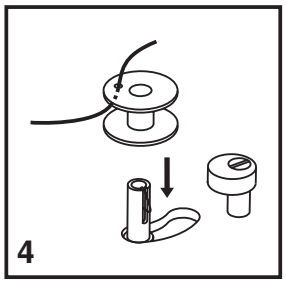

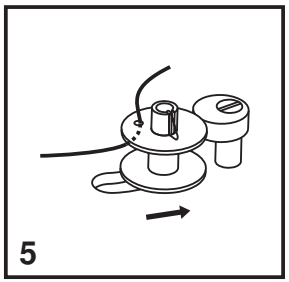

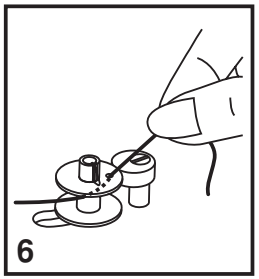

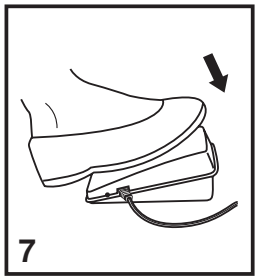

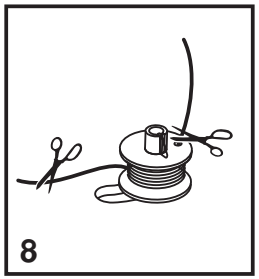

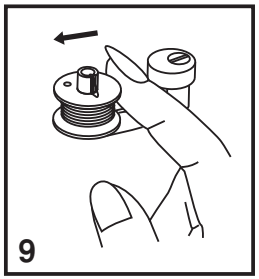

☐ Inserting the bobbin

When inserting or removing the bobbin, the needle must be fully raised.

- Open the hinged cover (1)

- Pull the bobbin case tab (a) and remove the bobbin case. (2)

- Hold the bobbin case with one hand. Insert the bobbin so that the thread runs in a clockwise direction (arrow) (3).

- Pull the thread through the slit and under the finger (4).

- Hold the bobbin case by the hinged latch (5).

- Insert it into the shuttle (6).

Attention:
Turn power switch to off ("O") before inserting or removing the bobbin.

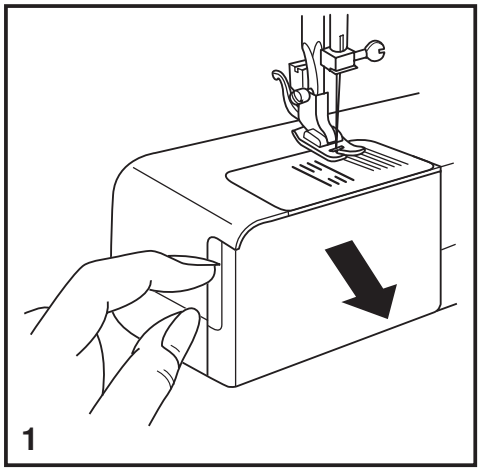
1

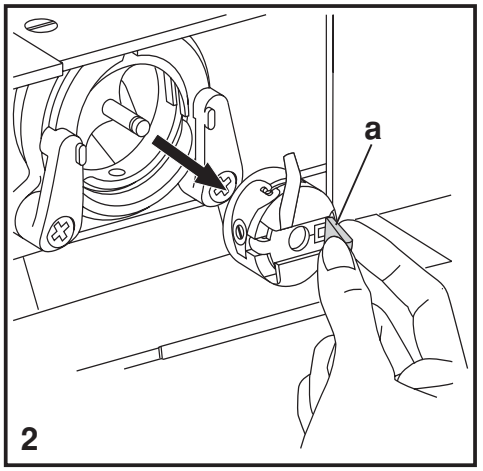

2

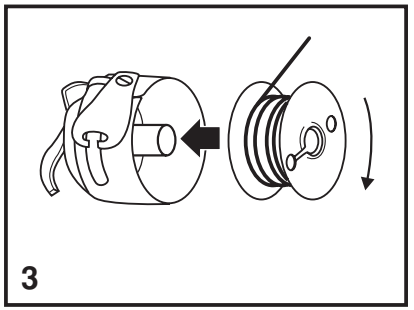
3

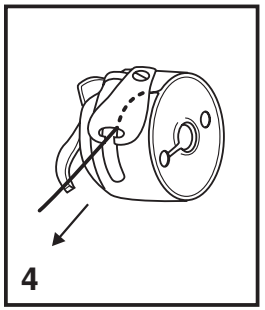
4

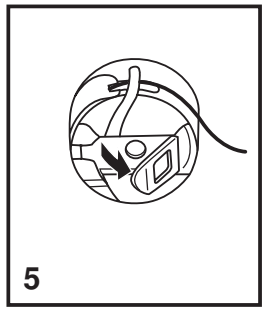
5

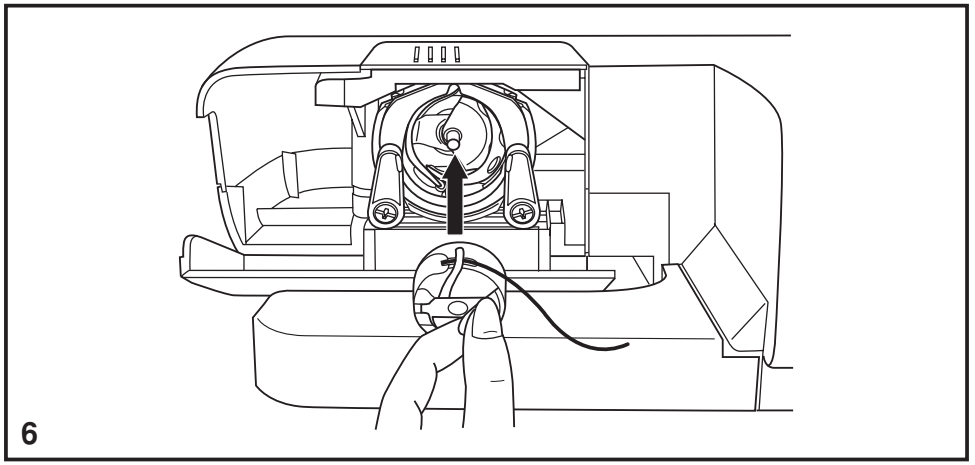
6

☐ Inserting and changing needles

Change the needle regularly, especially if it is showing signs of wear and causing problems.

For best sewing results always use SINGER Brand Needles.

Insert the needle as illustrated:

A. Loosen the needle clamp screw and tighten again after inserting the new needle. (1)
B. The flat side of the shaft should be towards the back.
C/D. Insert the needle as far up as it will go.

Attention:
Turn power switch to off ("O") before inserting or removing the needle.

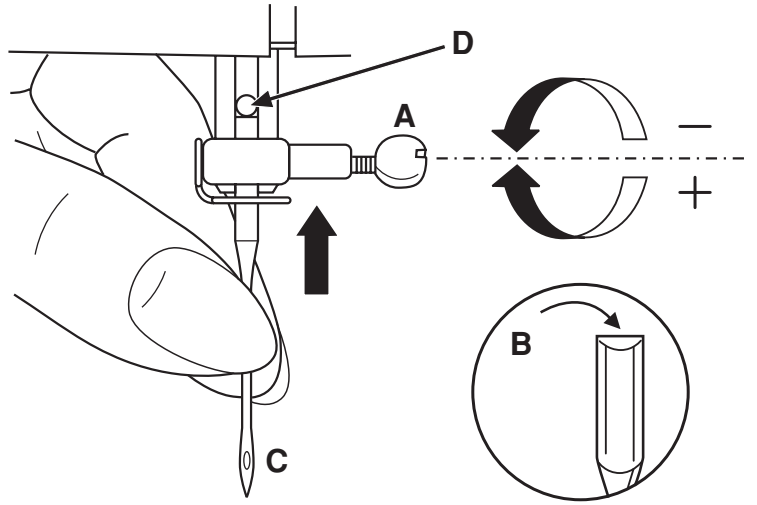

1

Needles must be in perfect condition. (2)
Problems can occur with:

A. Bent needles
B. Blunt needles
C. Damaged points

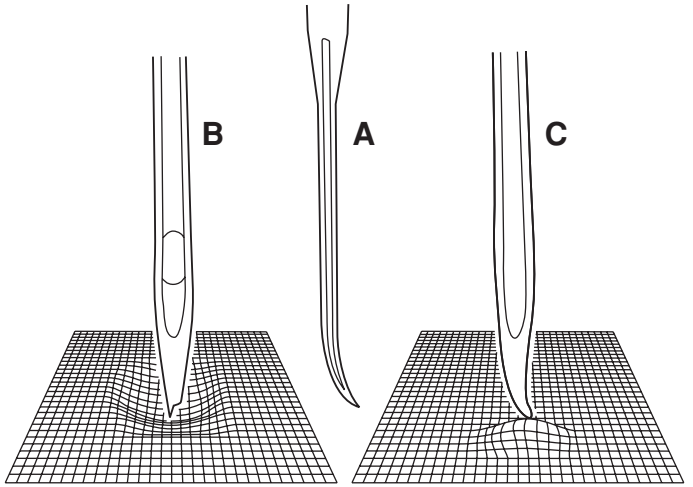

2

☐ Threading the upper thread

This is a simple operation but it is important to carry out correctly as by not doing so several sewing problems could result.

- Start by raising the needle to its highest point (1), and also raise the presser foot to release the tension discs.

  Note: For safety, it is strongly suggested you turn off the power before threading.

- Lift up the spool pin. Place the spool of thread on the holder with the thread coming off the spool as shown. For small thread spools, place small side of spool holder next to spool.(2)

- Draw thread from spool through the upper thread guide (3) and pulling thread through pre-tension spring as illustrated.

- Thread tension module by leading thread down right channel and up left channel (4). During this process it is helpful to hold the thread between the spool and thread guide (3).

- At the top of this movement pass thread from right to left through the slotted eye of the take-up lever and then downwards again. (5)

- Now pass thread behind the thin wire needle clamp guide (6) and then down to the needle which should be threaded from front to back.

- Pull about 6-8 inches of thread to the rear beyond the needle eye. Trim thread to length with built in thread cutter. (7)

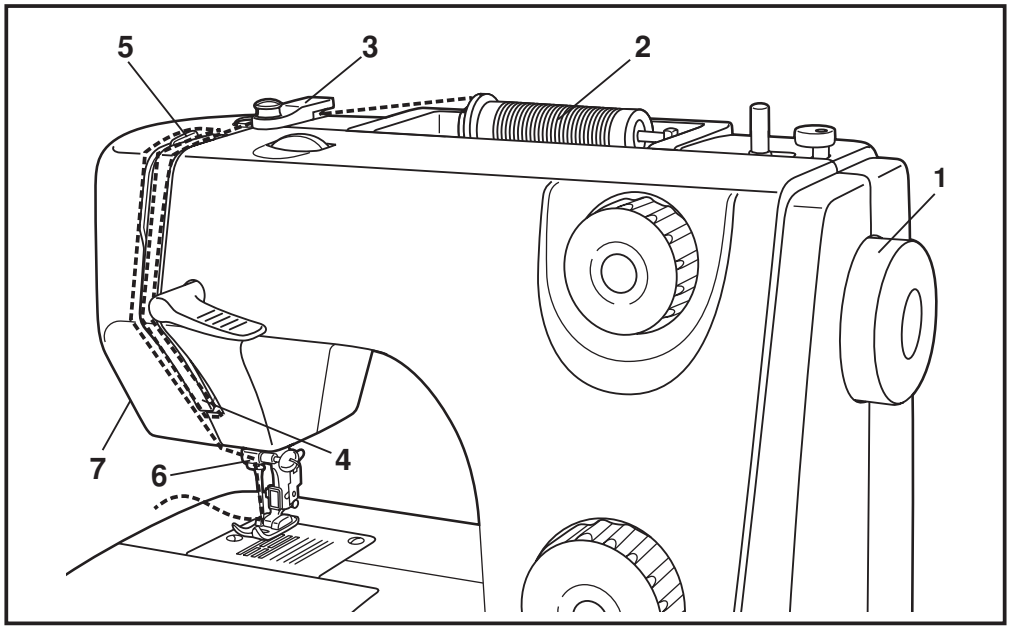

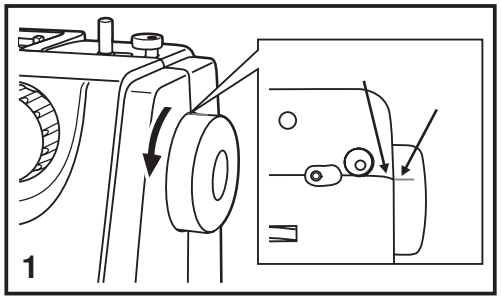

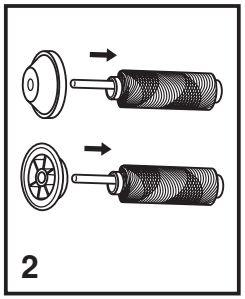

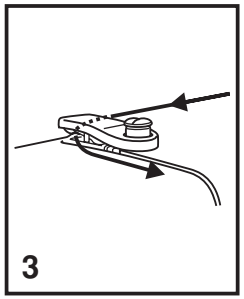

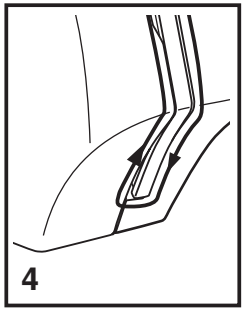

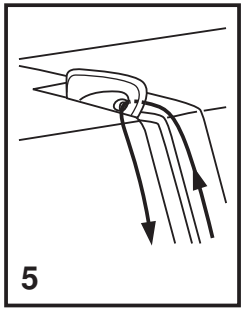

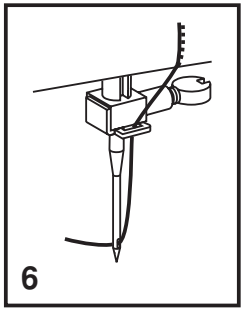

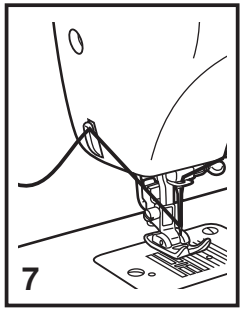

☐ Automatic needle threader (optional)

* The automatic needle threader is a factory installed option. If your machine has this option use the following instructions:

- Raise the needle to its highest position.

- Press lever (A) down as far as it will go.

- The threader automatically swings to the threading position (B).

- Pass thread around thread guide (C).

- Pass the thread in front of the needle around the hook (D) from bottom to top.

- Release lever (A).

- Pull the thread through the needle eye.

Attention:
Turn power switch to off ("O")!

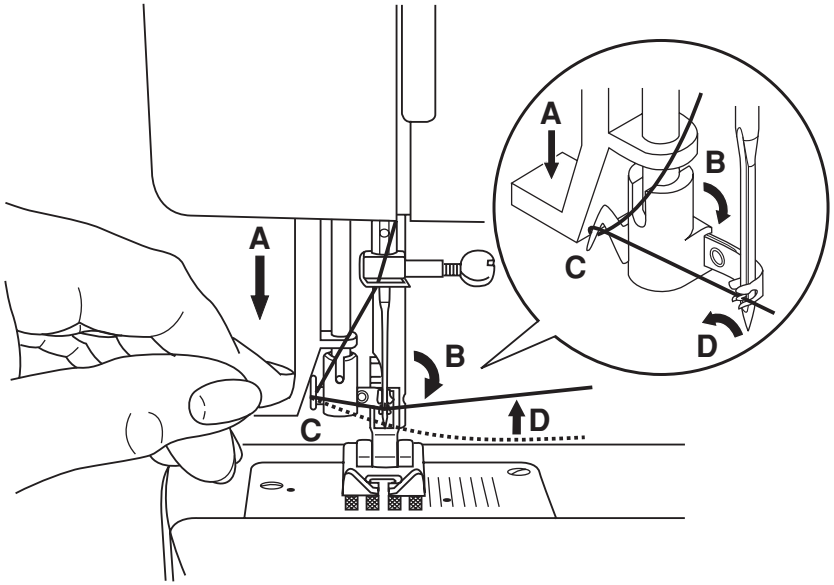

1

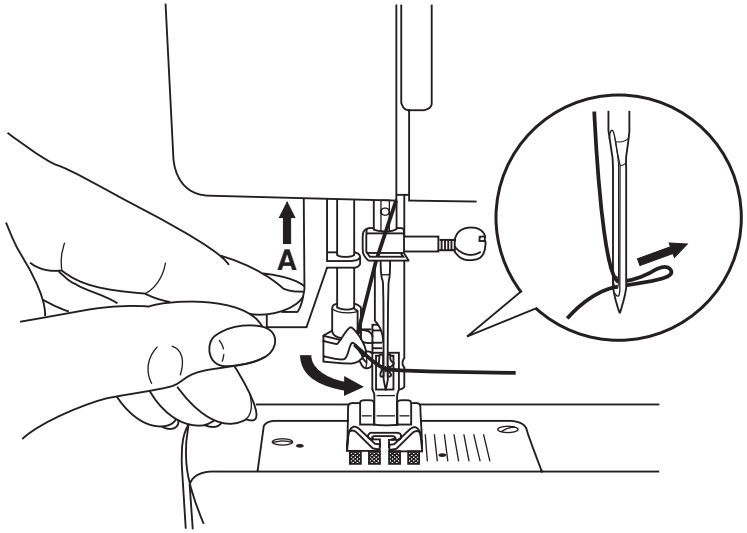

2

☐ Thread tension

Upper thread tension

Basic thread tension setting: "4"

To increase the tension, turn the dial to the next number up.

To reduce the tension, turn the dial to the next number down.

A.Normal thread tension for straight stitch sewing.

B.Thread tension too loose for straight stitch sewing. Turn dial to higher number.

C.Thread tension too tight for straight stitch sewing. Turn dial to lower number.

D.Normal thread tension for zig zag and decorative sewing. Correct thread tension is when a small amount of the upper thread appears on the bottom side of fabric.

Lower thread tension

To test the bobbin thread tension, remove the bobbin case and bobbin and hold it by suspending it by the thread. Jerk it once or twice. If the tension is correct, the thread will unwind by about an inch or two. If the tension is too tight, it does not unwind at all. If the tension is too loose, it will drop too much. To adjust, turn the small screw on the side of the bobbin case.

Please note:

- Proper setting of tension is important to good sewing.
- There is no single tension setting appropriate for all stitch functions, thread or fabric.
- A balanced tension (identical stitches both top and bottom) is usually only desirable for straight stitch construction sewing.
- 90% of all sewing will be between "3" and "5" .
- For zig zag and decorative sewing stitch functions, thread tension should generally be less than for straight stitch sewing.
- For all decorative sewing you will always obtain a nicer stitch and less fabric puckering when the upper thread appears on the bottom side of your fabric.

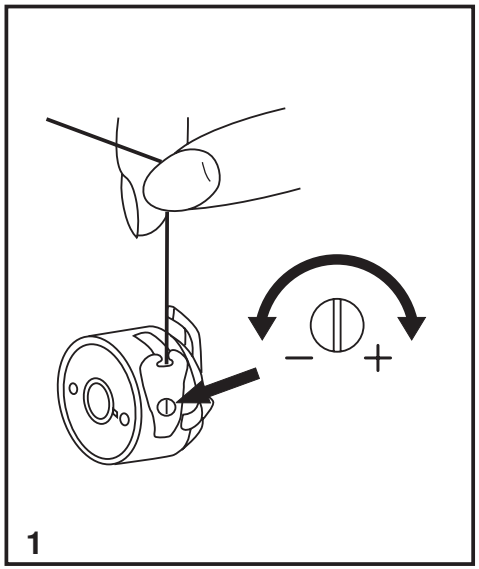

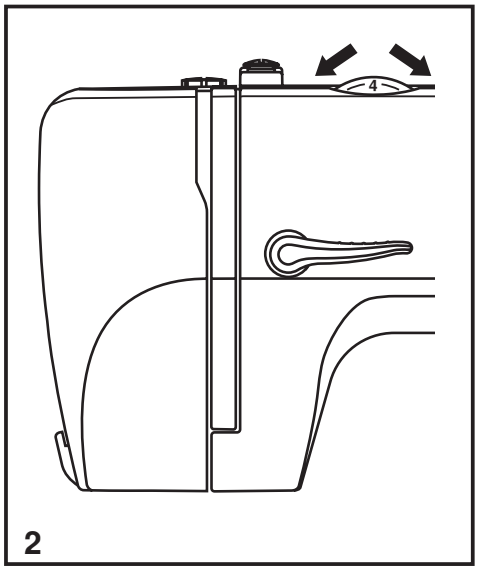

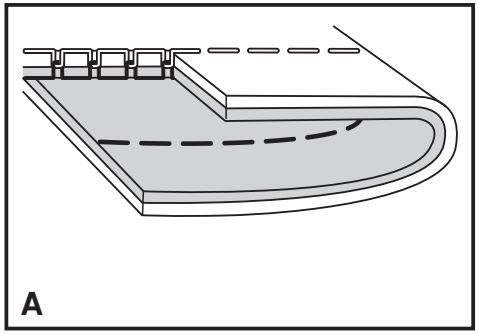

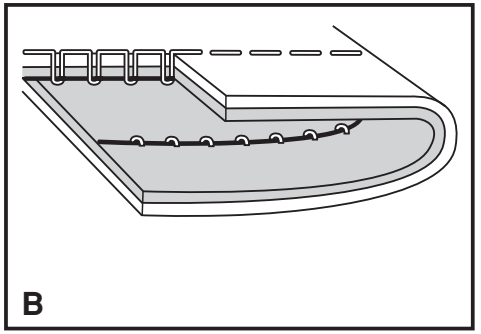

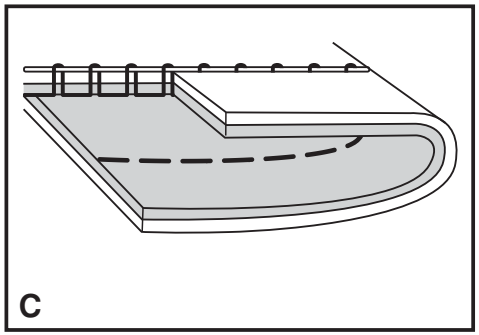

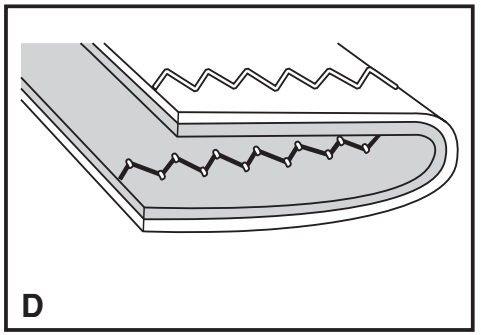

☐ Raising the bobbin thread

Hold the upper thread with the left hand. Turn the handwheel (1) towards you (counterclockwise) lowering, then raising needle.

Note:
If it is difficult to raise the bobbin thread, check to make sure the thread is not trapped by the hinged cover or the Removable Sewing Table.

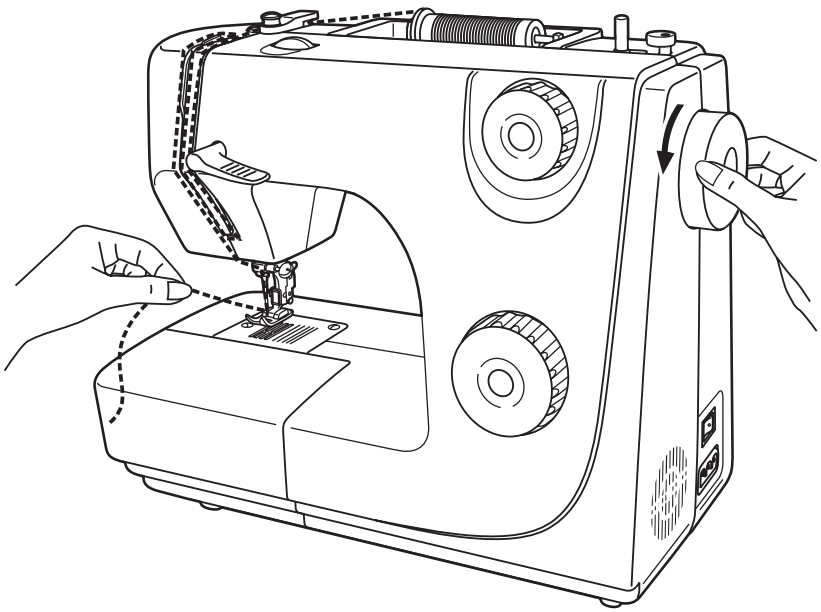

1

Gently pull on the upper thread to bring the bobbin thread up through the needle plate hole (2).

Lay both threads to the back under the presser foot. (3)

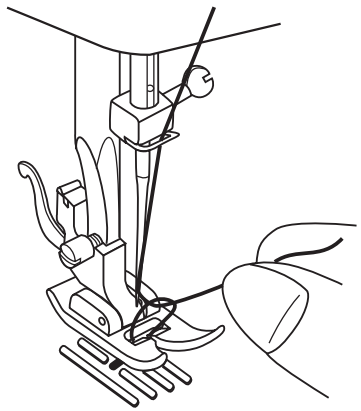

2

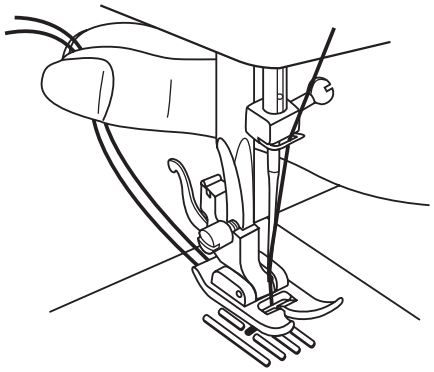

3

☐ Reverse sewing

To secure the beginning and the end of a seam, press down the reverse sewing lever (A).

Sew a few reverse stitches. Release the lever and the machine will sew forwards again. (1)

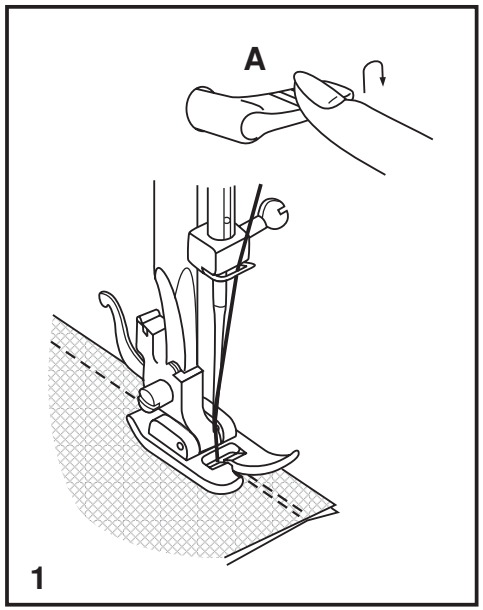

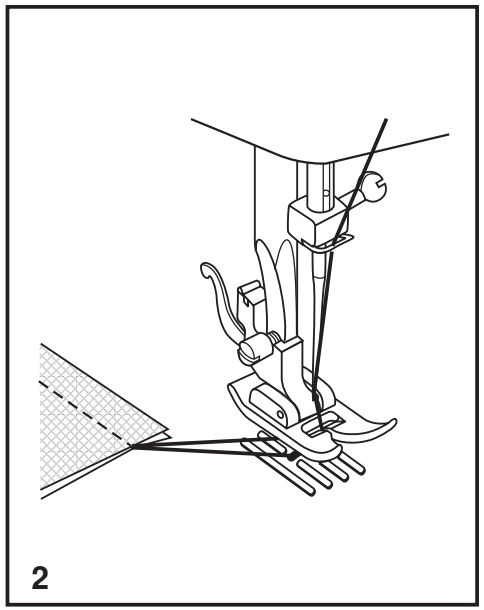

Removing the work

Turn the handwheel counterclockwise to bring the thread take up lever to its highest position, raise the presser foot and remove work behind the needle and presser foot. (2)

Cutting the thread

Pull the threads behind the presser foot. Guide the threads to the side of the face plate and into thread cutter (B).

Pull threads down to cut. (3)

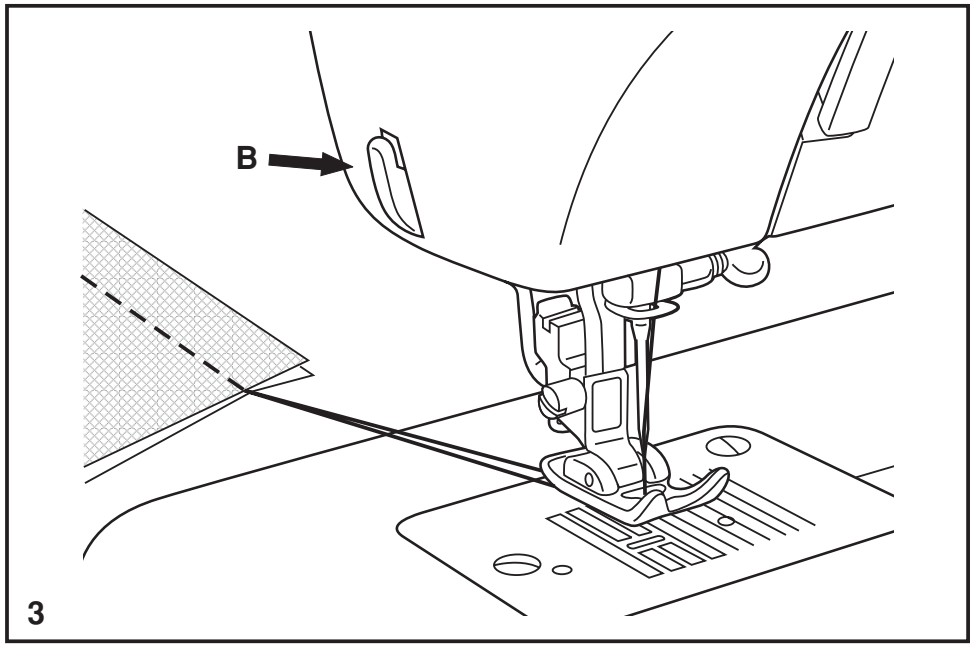

□ Matching needle/ fabric/ thread

NEEDLE, FABRIC, THREAD SELECTION GUIDE

NEEDLE SIZE	FABRICS	THREAD
9-11 (70-80)	Lightweight fabrics-thin cottons, voile, serge, silk , muslin, Qiana, interlocks, cotton knits, tricots, jerseys, crepes, woven polyester, shirt & blouse fabrics.	Light-duty thread in cotton, nylon ,polyester or cotton wrapped polyester.
11-14 (80-90)	Medium weight fabrics-cotton, satin, kettlecloth, sailcloth, double knits, lightweight woollens.	Most threads sold are medium size and suitable for these fabrics and needle sizes. Use polyester threads on synthetic materials and cotton on natural woven fabrics for best results. Always use the same thread on top and bottom.
14 (90)	Medium weight fabrics-cotton duck, woolen, heavier knits, terrycloth, denims.	
16 (100)	Heavyweight fabrics-canvas, woolens, outdoor tent and quilted fabrics, denims, upholstery material (light to medium).	
18 (110)	Heavy woollens, overcoat fabrics, upholstery fabrics, some leathers and vinyls.	Heavy duty thread, carpet thread. (Use heavy foot pressure-large numbers.)

IMPORTANT: Match needle size to thread size and weight of fabric.

NEEDLE, FABRIC SELECTION

NEEDLES	EXPLANATION	TYPE OF FABRIC
SINGER 2020	Standard sharp needles. Sizes range thin to large. 9 (70) to 18 (110).	Natural woven fabrics-wool, cotton, silk, etc. Qiana. Not recommended for double knits.
SINGER 2045	Semi-ball point needle, scarfed. 9 (70) to 18 (110).	Natural and synthetic woven fabrics, polyester blends. Knits-polyesters, interlocks, tricot, single and double knits. Also sweater knits, Lycra, swimsuit fabric, elastic.
SINGER	Twin Needle.	Woven fabrics and knits.
SINGER	Leather needles. 12 (80) to 18 (110)	Leather, vinyl, upholstery. (Leaves smaller hole than standard large needle.)

Note twin needle:

1. Twin needles, can be purchased for utility and decorative work.
2. When sewing with twin needles, the stitch width dial should be set at less than "3".
3. For best sewing results always use genuine SINGER needles.
4. Replace needle often (approximately every other garment) and/ or at first thread breakage or skipped stitches.

☐ How to choose your pattern

To select a stitch, simply turn the pattern selector dial. The pattern selector dial may be turned in either direction. The following page shows the recommended range of stitch lengths.

Adjust the stitch length with the stitch length dial according to the fabric being used.

To obtain any of the patterns shown on the stitch selection panel, select the pattern with the stitch selector dial. Adjust the stitch length with the control dials according to the result desired.

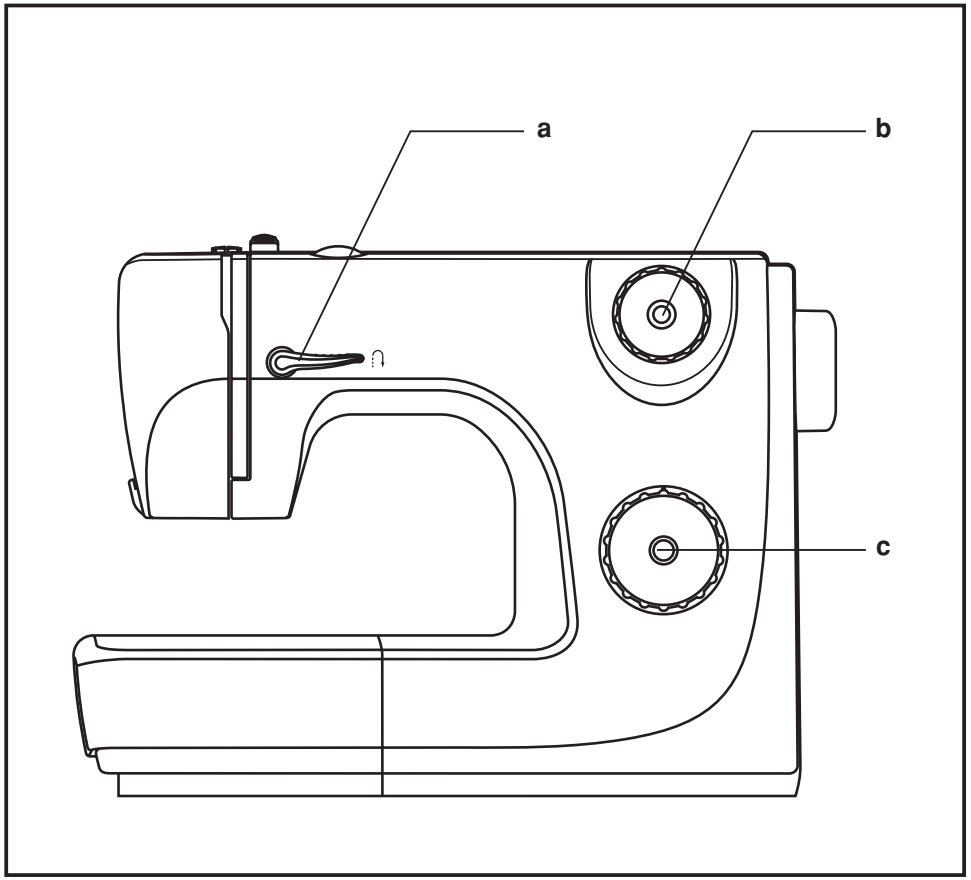

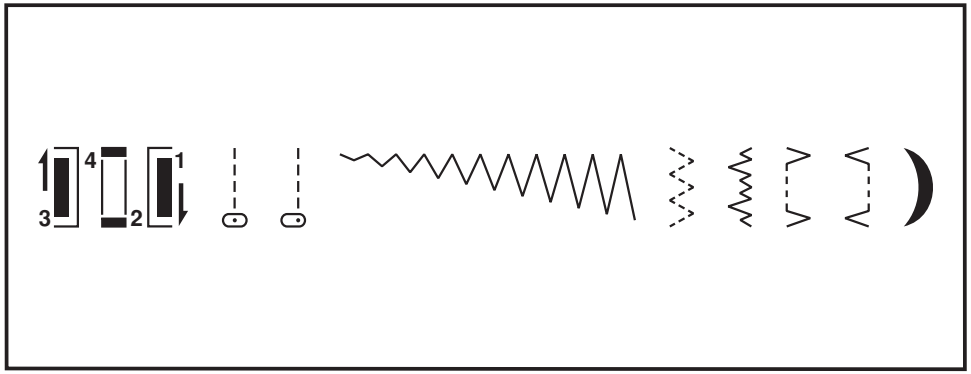

a. Reverse lever
b. Stitch length dial
c. Pattern selector dial

☐ Straight stitching and needle position

Turn the stitch selection dial so that the pointer is set to the straight stitch position.

Choose your needle position, from center needle position or right needle position.

Generally speaking, the thicker the fabric, thread and needle, the longer the stitch should be. For a fine stitch set length at "1" or "2".

For gathering set to straight stitch, with stitch length at "4".
Do 2 rows of stitching ¼ of an inch apart. Remove from machine, hold bobbin thread and gather fabric to desired fullness.

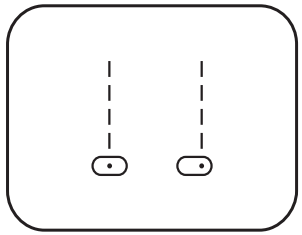

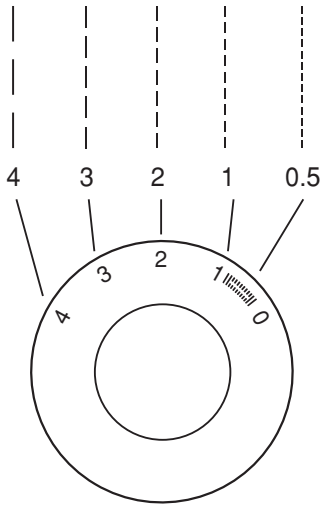

Topstitching

Topstitching is used to embellish a variety of projects. Sew 1/4 of an inch from the edge of your garment or seam to topstitch.

Turn the stitch selection dial so that the pointer is set to the straight stitch position. Choose center needle position.
For topstitching variable stitch length can be used. Use the all purpose foot to perform this function.

□ Zigzag stitching

Turn the pattern selector dial so that the stitch display shows "zig-zag" " ".

Turning the pattern selector dial will increase or decrease the zig zag width. (1)

Function of stitch length dial while zigzag

The density of zigzag stitches increase as the setting of stitch length dial approaches "0".

Neat zigzag stitches are usually achieved at "2.5" or below.

Closed up zigzag stitches (close together) are referred to as a satin stitch. (2)

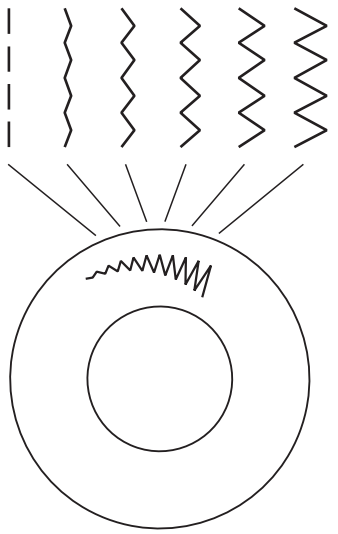

1

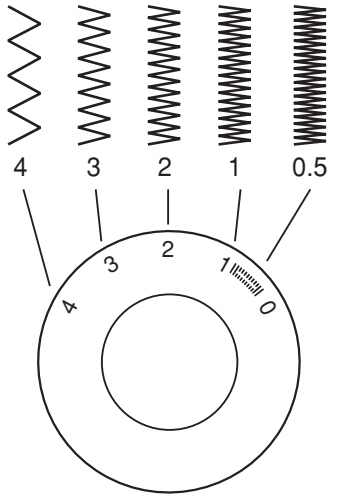

2

☐ Blind hem/ Lingerie stitch

For hems, curtains, trousers, skirts, etc.

Blind hem for stretch fabrics.

Blind hem/ lingerie for firm fabrics.

Note:
It takes practice to sew blind hems.
Always make a sewing test first.

Turn up the hem to the desired width and press. Fold back (as shown in Fig. 1) against the right side of the fabric with the top edge of the hem extending about 5 mm. (1/5") to the right side of the folded fabric.

Start to sew slowly on the fold, making sure the needle touches slightly the folded top to catch one or two fabric threads (2).

Unfold the fabric when hemming is completed and press.

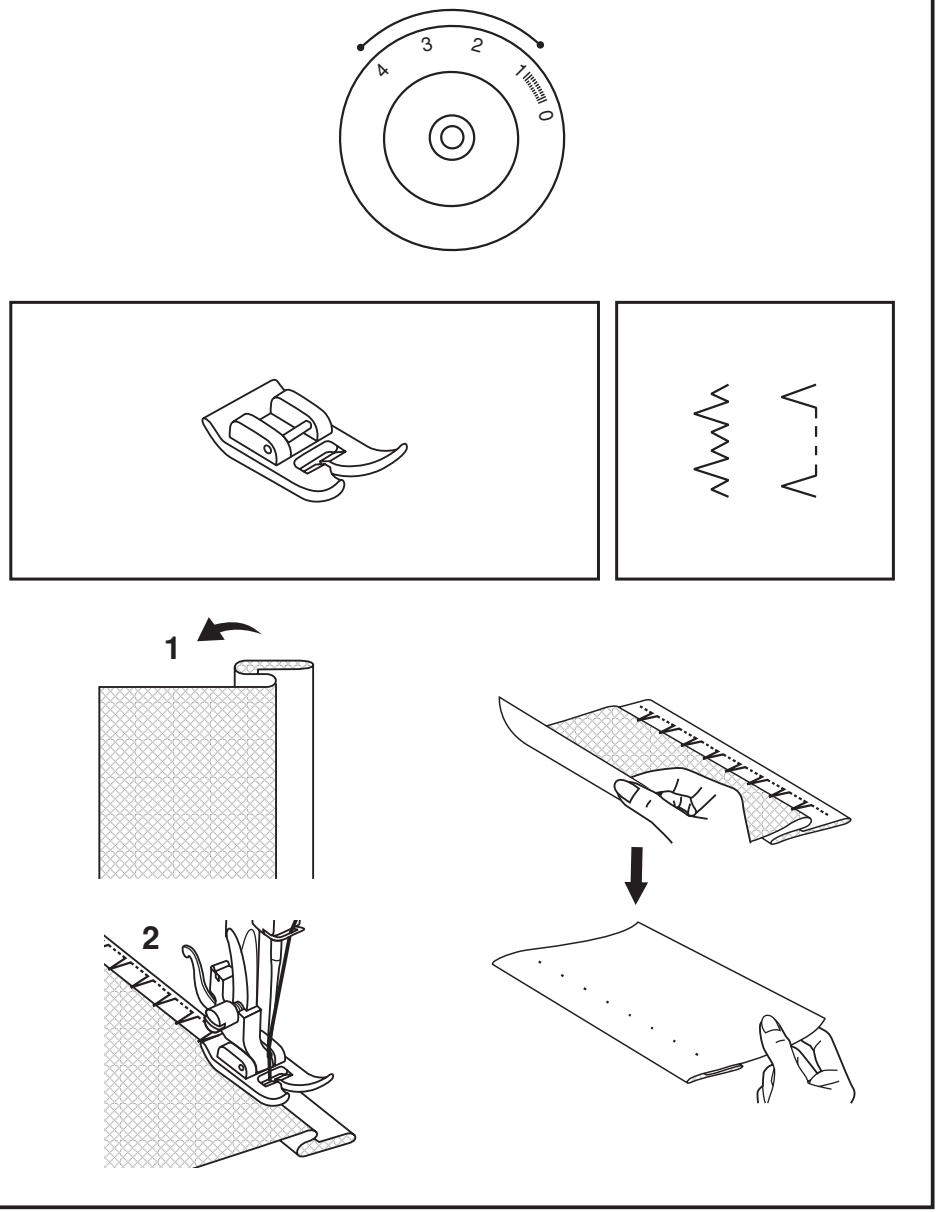

☐ Sewing on buttons

Install the darning plate. (1)

Change presser foot to button sewing foot.

Position the work under the foot. Place the button on the marked position, lower the foot. Adjust stitch width to " " and sew a few securing stitches. Set the stitch width to number "3" - "5". Turn the handwheel to check that the needle goes cleanly into the left and right holes of the button (adjust the stitch width according to the button), and slowly sew on the button with about 10 stitches.
Adjust the stitch width to " " and sew a few securing stitches (2).

If a shank is required, place a darning needle on top of the button and sew (3). For buttons with 4 holes, sew through the front two holes first (2), push the work forward and then sew through the back two holes as described (3).

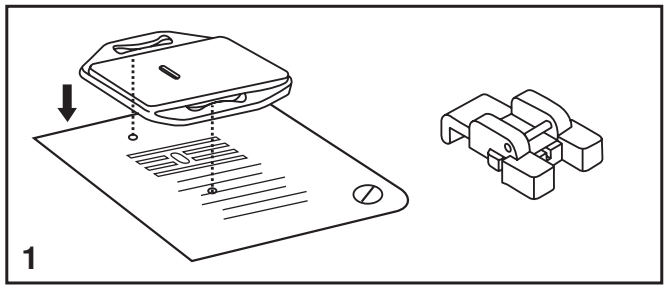

1

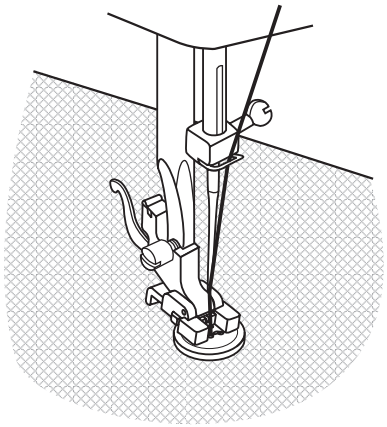

2

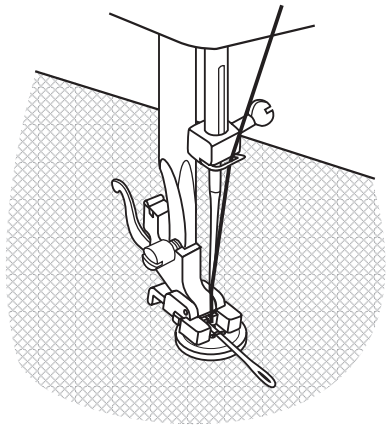

3

☐ Sew 4-step buttonholes

Prepare

1. Take off the all purpose foot and attach the buttonhole foot.
2. Measure diameter and thickness of button and add 0.3 cm (1/8") for bar tacks; mark buttonhole size on fabric.
3. Place fabric under the foot, so that marking on the buttonhole foot aligns with starting marking on fabric. Lower the foot, so that the buttonhole center line marked on the fabric aligns with the center of the buttonhole foot.

Adjust the stitch length dial in the " " to set stitch density.

Note:
Density varies according to the fabric.

Always test sew a buttonhole on the fabric you are using to sew the buttonhole.

Follow the 4-step sequence changing from one step to another with the stitch pattern selector dial. Take care not to sew too many stitches in stages 2 and 4. Use seam ripper and cut buttonhole open from both ends towards the middle.

Tips:

- Slightly reducing upper thread tension will produce better results.
- Use a backing for fine or stretchy fabrics.
- It is advisable to use heavy thread or cord for stretch or knit fabrics.
- The zig-zag should sew over the heavy thread or cord. (5)

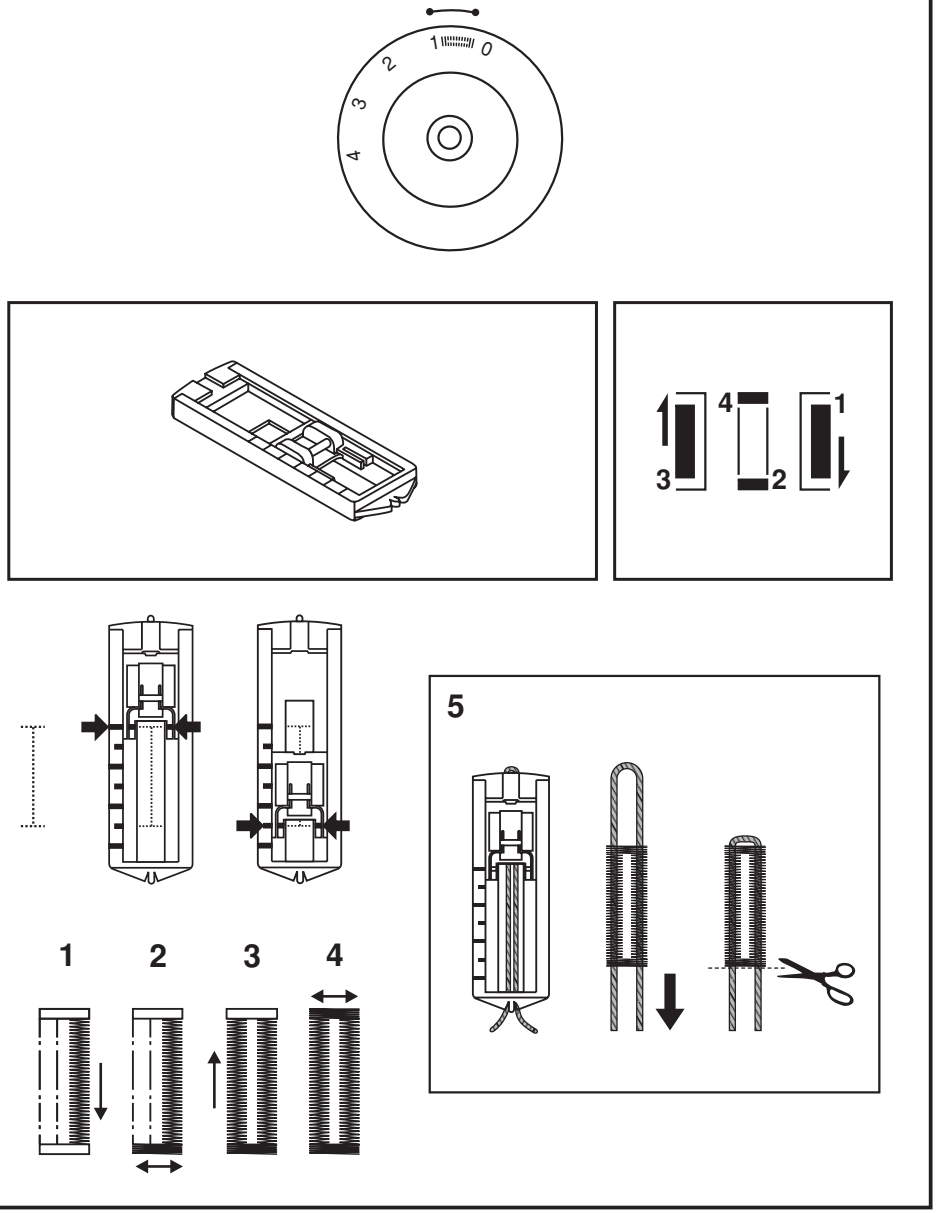

☐ Zippers and piping

Set the machine as illustrated.

Dial selector on " ".

Set stitch length control between "1" - "4" (according to thickness of fabric). Change to zipper foot.

The zipper foot can be attached right or left, depending on which side of the foot you are going to sew. (1)

To sew past the zipper pull, lower the needle into the fabric, raise the presser foot and push the zipper pull behind the presser foot. Lower the foot and continue to sew.

It is also possible to sew a length of cord into a bias strip to form a "welt" or piping. (2)

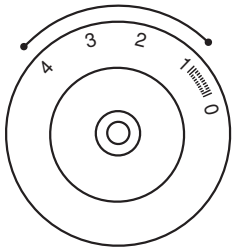

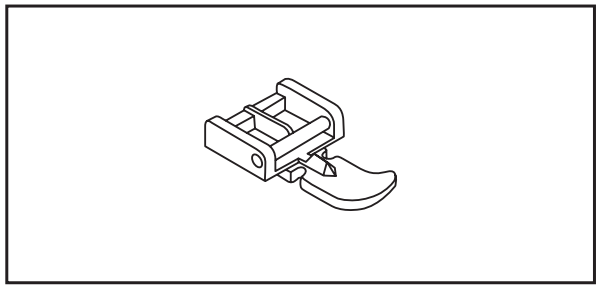

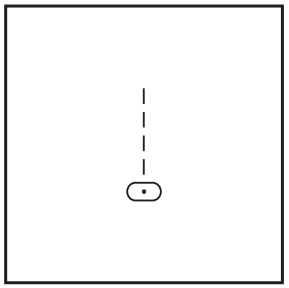

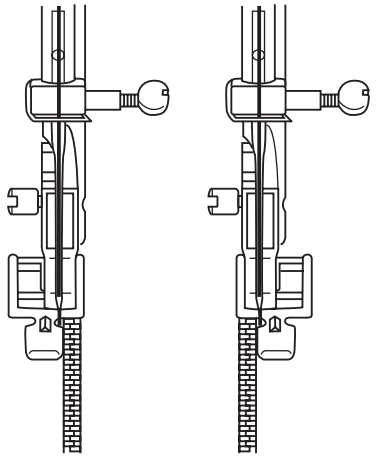

1

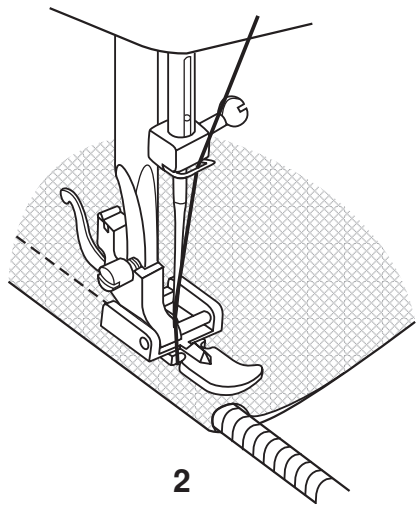

2

☐ Multi-stitch zig-zag

Sewing on lace and elastic, darning, mending, reinforcing edges.

Set the stitch pattern dial to " ". Place patch in position.

The stitch length can be shortened to produce very close stitches. (1)

When mending tears, it is advisable to use a piece of backing fabric to reinforce. The stitch density can be varied by adjusting the stitch length. First sew over the center and then overlap on both sides. Depending on the type of fabric and damage, sew between 3 and 5 rows. (2)

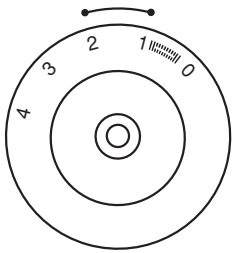

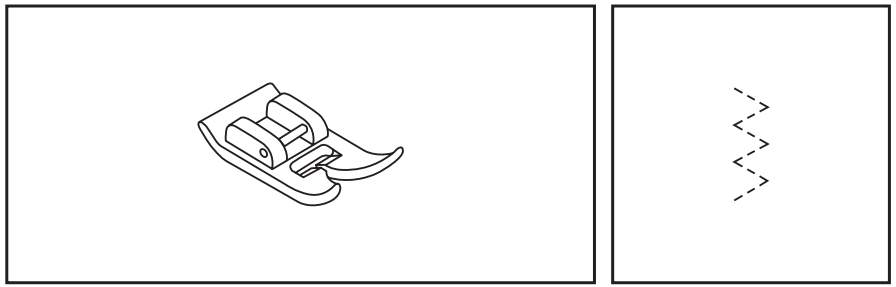

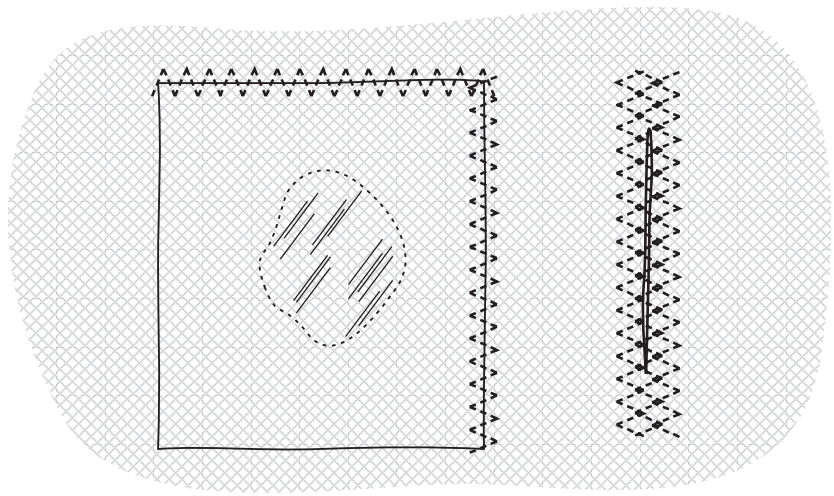

1 2

Bar tack

Set the stitch pattern dial to " " or " ".

Set the stitch length dial to "1" - "1.5".

This function is used to secure the tops of kick pleats, as well as pocket openings. First use a straight stitch across the top of the pocket or pleat. This seam should be approximately 1/4 to 1/2 of an inch long. Set stitch to zigzag and stitch over the straight stitch backstitch at the beginning and end of stitch to secure ends.

☐ Free motion darning, stippling

* The darning foot is an optional accessory not included with your machine. (1)

Install the darning plate (2) and Remove the presser foot clamp. (3)

Attach the darning foot to the presser foot holder. The lever (a) should be behind the needle clamp screw (b). Press the darning foot on firmly from behind with your index finger and tighten the screw (c). (4)

For darning, first sew around the edge of the hole (to secure the threads). (5)

First row: Always work from left to right. Turn work by 1/4 and oversew.

A darning hoop is recommended for easier sewing and better results. For stippling, stitch in any direction without repositioning the quilt. It is used to create texture and fill the background.

Note:
Free motion darning is accomplished without the sewing machine internal feed system.
Movement of the fabric is controlled by the operator.
It is necessary to coordinate sewing speed and movement of fabric.

Sew a straight or zigzag stitch following your design line.
Using the optional darning foot will help guide you as you sew.

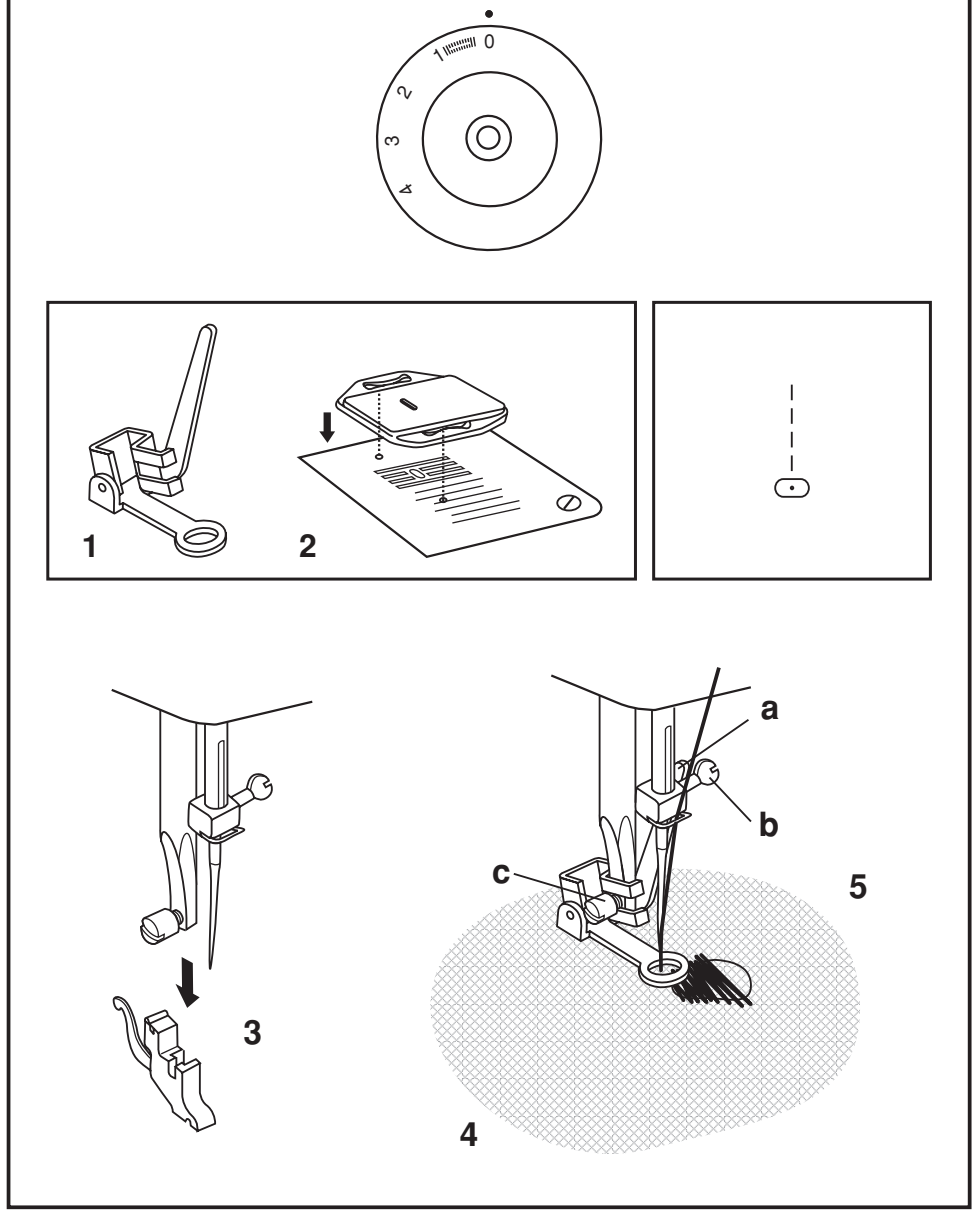

☐ Decorative stitches

Set the machine as illustrated.

Turn the stitch length dial to suit the fabric and application.

Shell stitch (A)
For decorative edges.
Suitable for edges on sheer, fine and stretch fabrics. The larger stitch should go just over the edge of the fabric to create the shell effect.

Crescent stitch (B)
For a delicate edge finish along the edge of fabric.

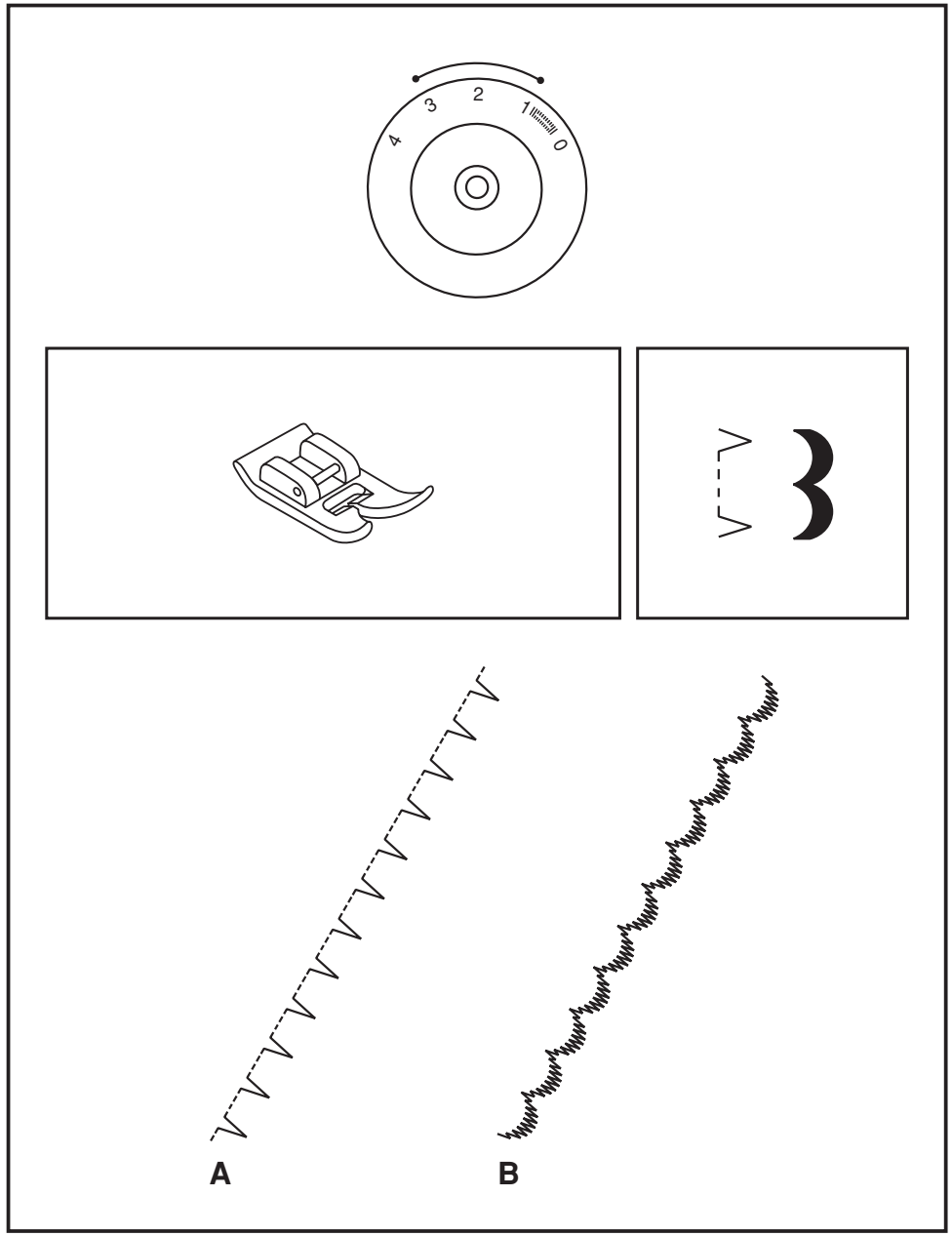

☐ Applique and blindstitch applique

Position applique piece on background fabric.

Align needle so that it pierces background fabric along the outside edge if the applique. Lower presser foot.

If using a blindhem foot, align the lip of the blindhem foot guide so that it sits directly under the edge of the applique.

You may need to adjust the position of the guide to bring it closer or further from the edge of the applique, by using the thumbscrew located at the right of the foot.

Begin sewing following the edge of your applique.

To pivot for curves or corners, leave needle down in fabric on outside edge of applique, lift foot and pivot.

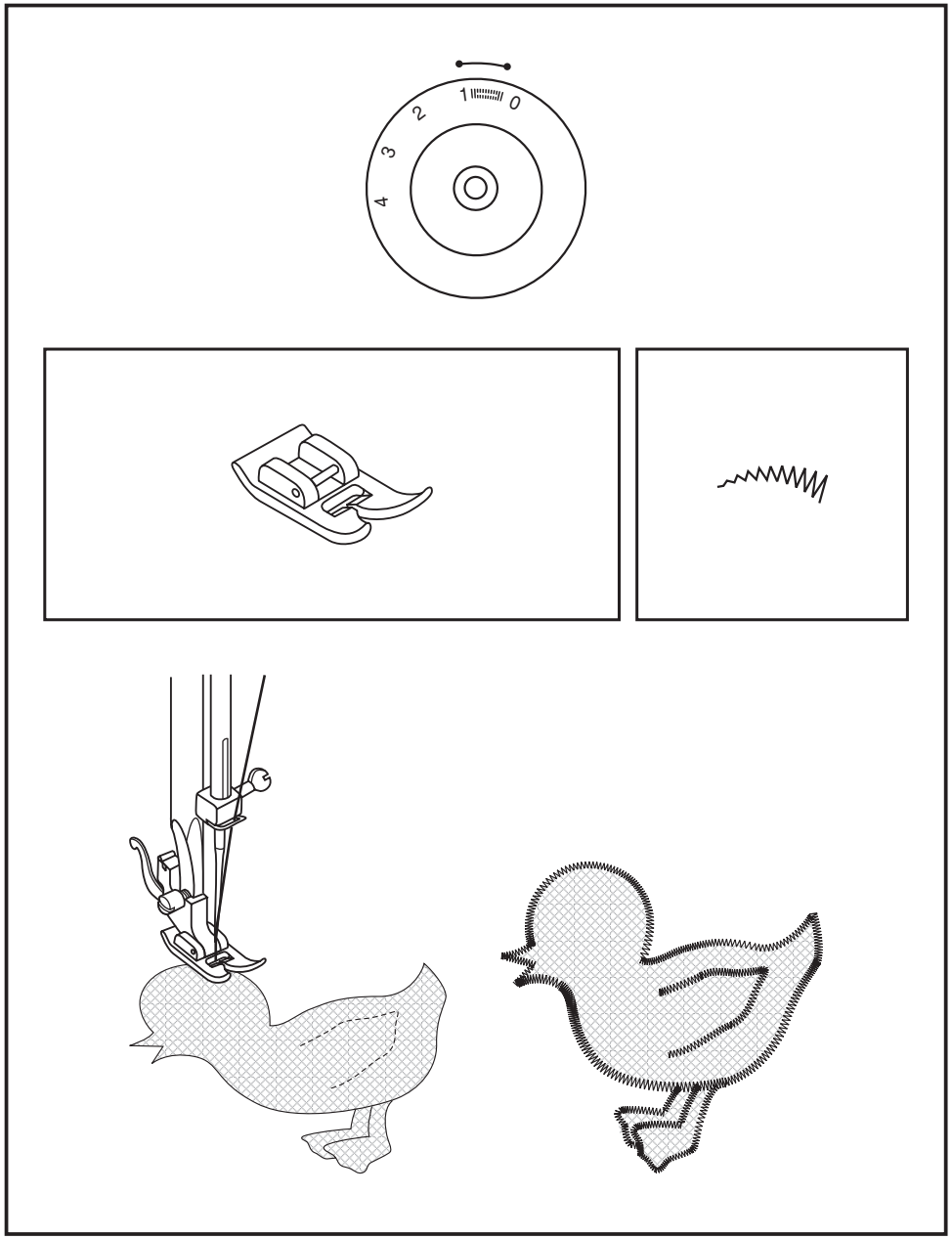

☐ Quilting functions

* The Quilting foot is an optional accessory not included with your machine.

Stippling is free motion quilting where you hoop the fabric and guide it by hand, allowing you to stitch in any direction.

For template quilting transfer a design from a template (plastic stencil) to your fabric and then stitch following the outline.

Do not forget to lower the presser bar if you are sewing without a foot. The above techniques are used to hold the layers of the quilt together. For better control use a hoop, as well as a Darning and Embroidery foot.

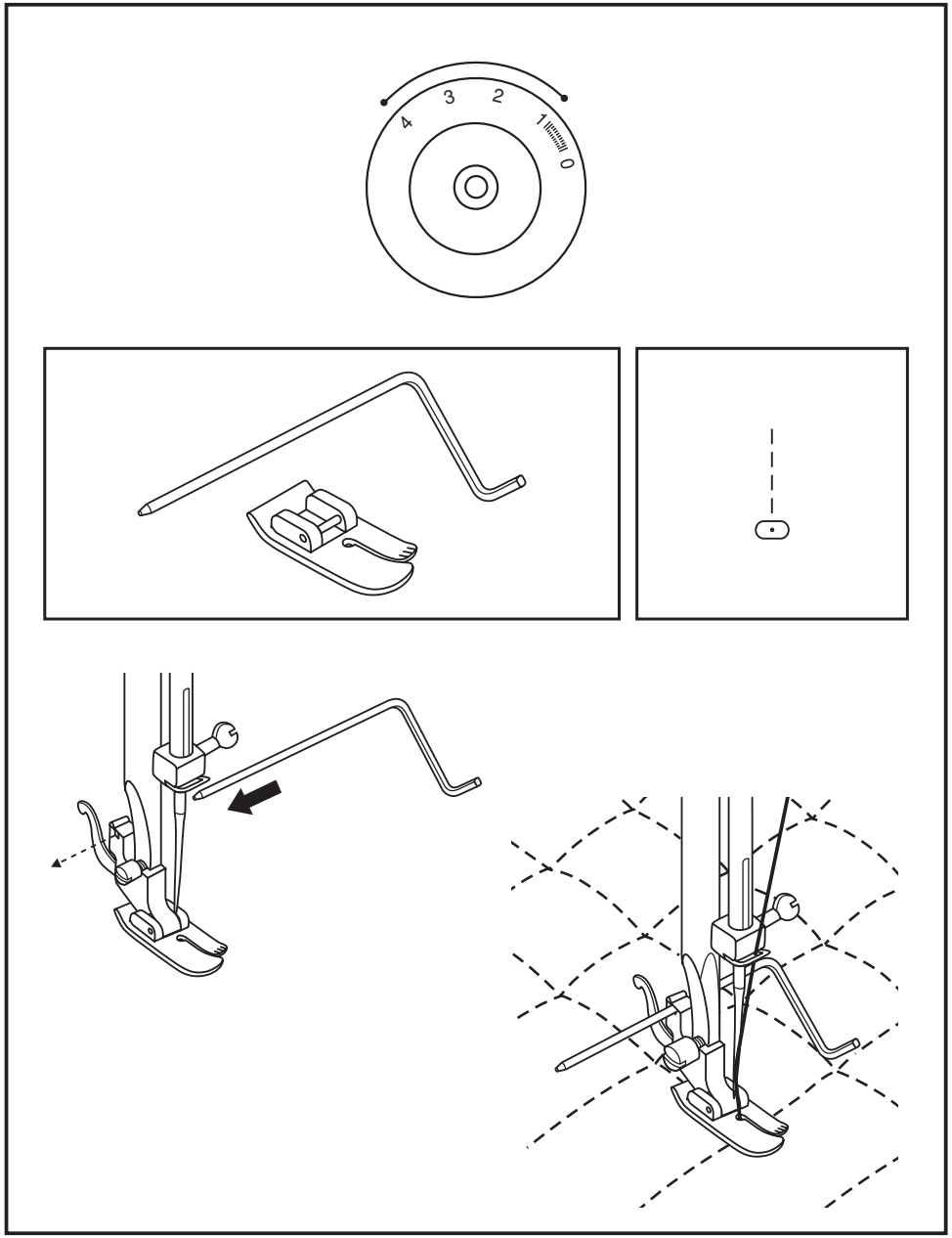

☐ Mending

Machine Preparation:

- Pattern: Multi - stitch Zigzag
- Stitch width: Largest 4.5mm
- Stitch length: Fine (0.5 - 1.0)

Sewing Instructions:

Position a piece of fabric directly beneath the tear in your fabric. Align the center of the foot with the center of the tear.

Stitchacross, backstitching at the start and at the end of the seam.

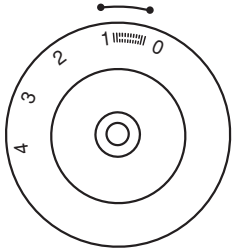

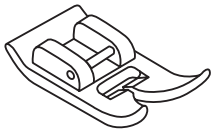

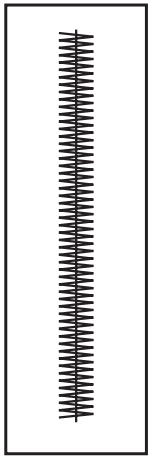

☐ Staystitching

Machine Preparation:

- Pattern: Straight Stitch
- Stitch length: 1.5mm (fine)

Sewing Instructions:

Staystitching is used to reinforce curves such as armholes, seams in stretch fabrics and other areas to prevent stretching. Stay stitch along the edge of the area 1/4 of an inch from the edge of the seam.

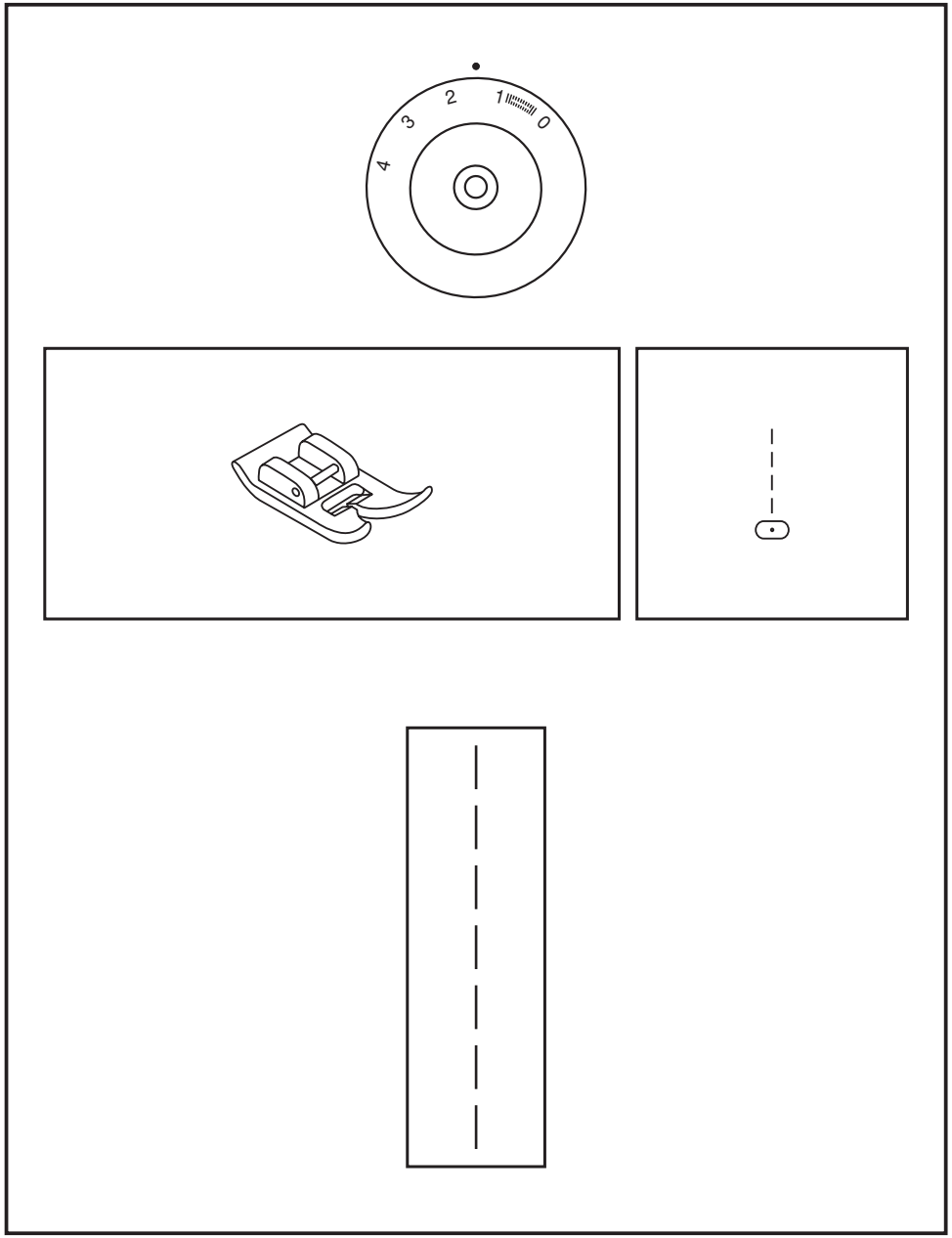

☐ Traditional PinTucks

Machine Preparation:

- Pattern: Straight
- Stitch Length: 2 - 3

Sewing Instructions:

To mark pintucks in your fabric, either pull a thread to mark the fold or mark with chalk or marking pencil. Fold and press wrong sides together on pulled thread line or marked lines. Stitch 1/8 of an inch from fold line. Repeat, sewing in the same direction for each tuck. Press flat.

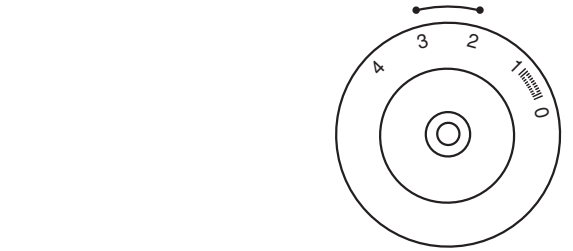

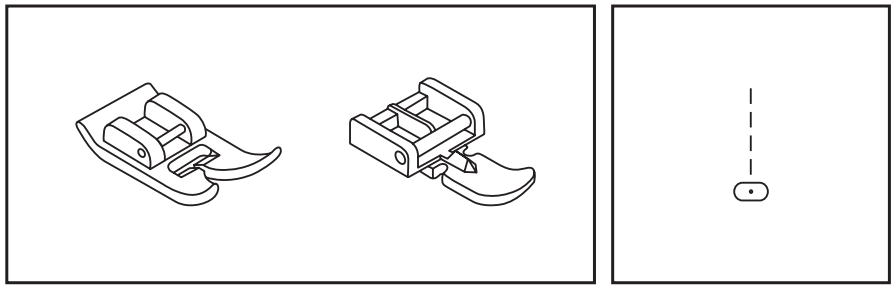

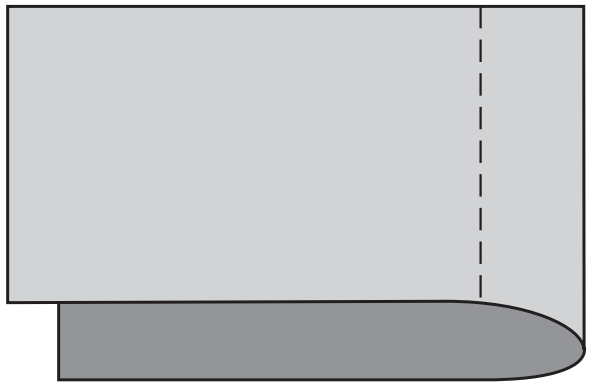

☐ Gathering

Machine Preparation:

- Pattern: Straight Stitch
- Stitch Length: Longest

Sewing Instructions:

Use this technique for gathering waistbands, sleeve caps etc.

At 1/4 of an inch from the edge of the seam, begin by backstitching and then continue to sew the length required. When seam is complete, raise the needle to it's highest, raise the presser foot and pull the upper and lower threads to the back of the foot.

Cut your thread ends leaving a minimum 6 inches of thread. Repeat this procedure once again at 1/4 of an inch from your first row of stitching.

Once the two rows are completed, draw in your fabric the required amount by pulling on the bobbin thread. Secure thread ends.

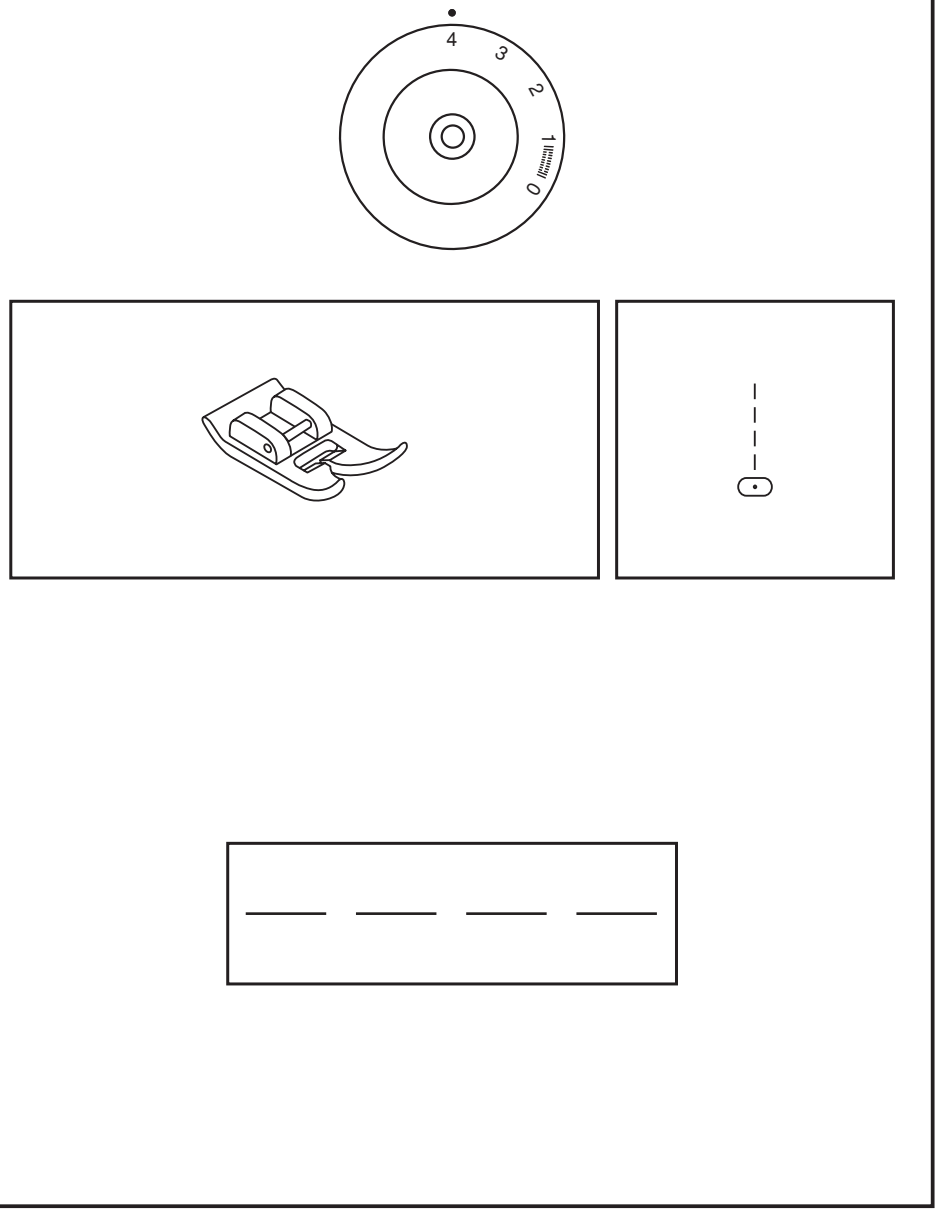

☐ Couching

Machine Preparation:

- Pattern: Zigzag
- Stitch width: Variable (Set according to width of cord)
- Stitch length: Variable

Sewing Instructions:

Couching is simply the technique of zigzagging over a fine cord. Use as a decorative touch on jackets and other sewing projects. With a marking pencil, draw a design on your fabric. Lay the cord under the center opening of your foot and zigzag over the cord so that the needle falls just to the right and left of the decorative cord. As you sew, follow the lines of your design.

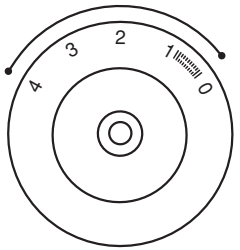

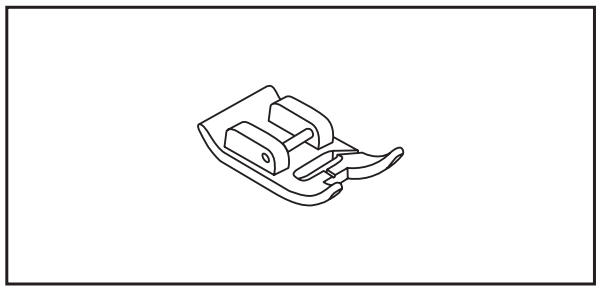

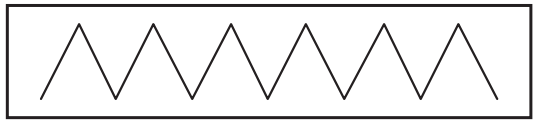

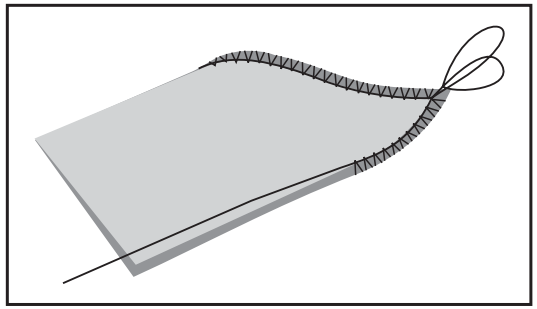

☐ Maintenance

Attention:
Disconnect the machine from the electricity supply by removing the plug from the mains socket.
When cleaning the machine, it must always be disconnected from the electricity supply.

Remove the needle plate:
Turn the handwheel until the needle is fully raised.
Open the hinged front cover and unscrew the needle plate screw withe the screw driver. (1)

Cleaning the feed dog:
Remove the bobbin case and use the brush supplied to clean the whole area. (2)

Cleaning and lubricating the hook:
Remove the bobbin case. Snap the two hook retaining arms (3) outwards. Remove the hook race cover (4) and the hook (5) and clean withe a soft cloth. Lubricate at the points (6) (1-2 drops) with sewing machine oil.

Turn the handwheel until the hook race (7) is in the left position. Replace the hook (5). Replace the hook race cover and snap back the two hook retaining arms. Insert he bobbin case and bobbin and replace the stitch plate.

Important:
Fabric fluff and threads must be removed regularly.
Your machine should be serviced at regular intervals.

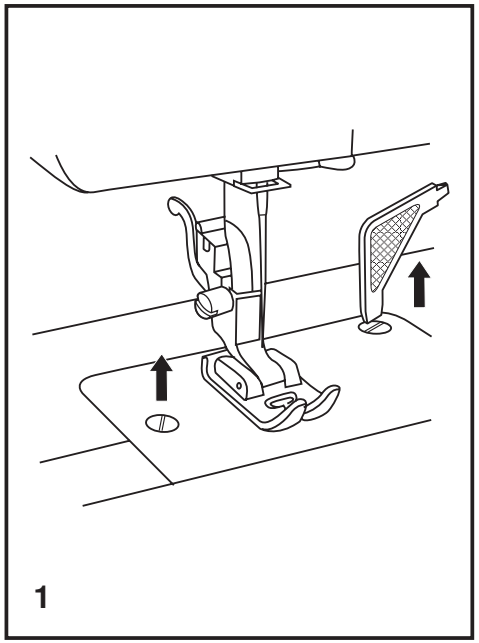

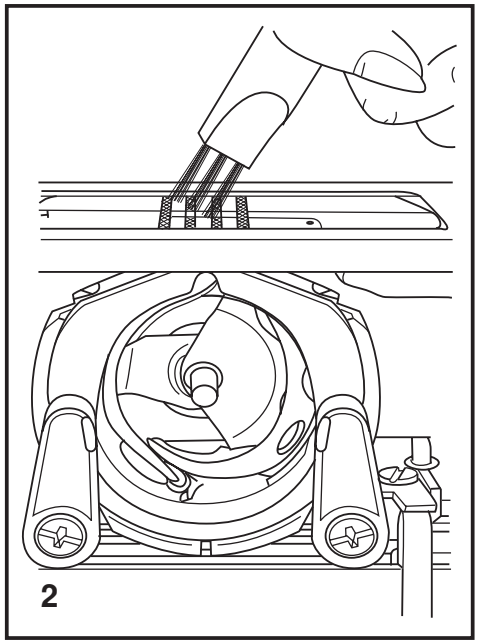

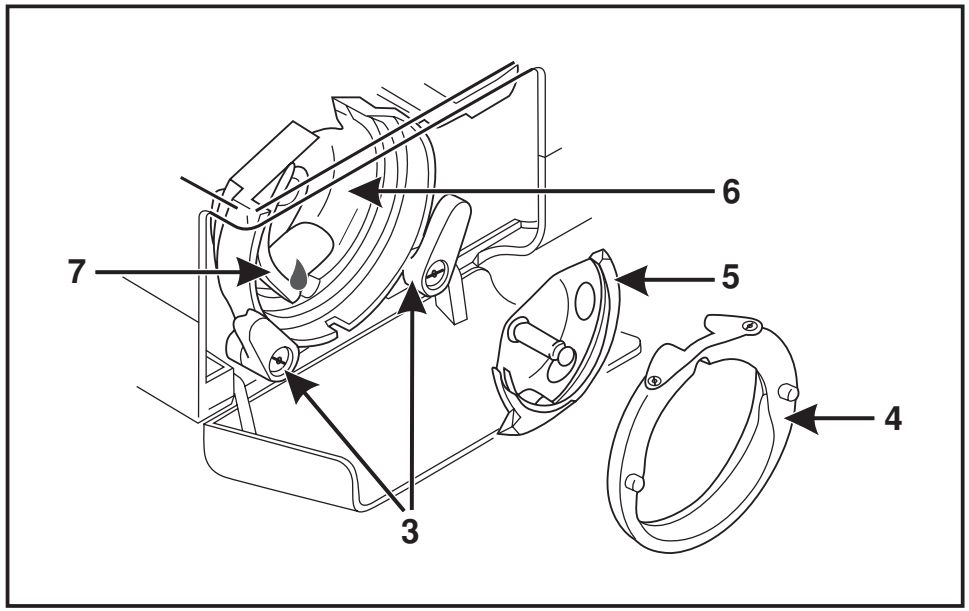

☐ Trouble shooting guide

Problem	Cause	Correction
Upper thread breaks	1.The machine is not threaded correctly. 2.The thread tension is too tight. 3.The thread is too thick for the needle. 4.The needle is not inserted correctly. 5.The thread is wound around the spool holder pin. 6.The needle is damaged.	1.Rethread the machine. 2.Reduce the thread tension. (lower number) 3.Select a larger needle. 4.Remove and reinsert the needle. (flat side towards the back) 5.Remove the reel and wind thread onto reel. 6.Replace the needle.
Lower thread breaks	1.The bobbin case is not inserted correctly. 2.The bobbin case is threaded wrong. 3.The lower thread tension is too tight.	1.Remove and reinsert the bobbin case and pull on the thread. The thread should pull easily. 2.Check both bobbin and bobbin case. 3.Loosen lower thread tension as described.
Skipped stitches	1.The needle is not inserted correctly. 2.The needle is damaged. 3.The wrong size or type of needle has been used. 4.The foot is not attached correctly.	1.Remove and reinsert needle. (flat side towards the back) 2.Insert a new needle. 3.Choose a needle to suit the thread and fabric. 4.Check and attach correctly.
Needle breaks	1.The needle is damaged. 2.The needle is not correctly inserted. 3.Wrong needle size for the fabric. 4.The wrong foot is attached.	1.Insert a new needle 2.Insert the needle correctly. (flat side towards the back) 3.Choose a needle to suit the thread and fabric. 4.Select the correct foot.
Loose stitches	1.The machine is not correctly threaded. 2.The bobbin case is not correctly threaded. 3.Needle/ fabric/ thread combination is wrong. 4.Thread tension wrong.	1.Check the threading. 2.Thread the bobbin case as illustrated. 3.The needle size must suit the fabric and thread. 4.Correct the thread tension.
Seams gather or pucker	1.The needle is too thick for the fabric. 2.The stitch length is incorrectly adjusted. 3.The thread tension is too tight.	1.Select a finer needle. 2.Readjust the stitch length. 3.Loosen the thread tension.
Uneven stitches, uneven feed	1.Poor quality thread. 2.The bobbin case is incorrectly threaded. 3.Fabric has been pulled.	1.Select a better quality thread. 2.Remove bobbin case, thread and insert correctly. 3.Do not pull on the fabric while sewing, let it be taken up by the machine.
The machine is noisy	1.The machine must be lubricated. 2.Lint or oil have collected on the hook or needle bar. 3.Poor quality oil has been used. 4.The needle is damaged.	1.Lubricate as described. 2.Clean the hook and feed dog as described. 3.Only use good quality sewing machine oil. 4.Replace the needle.
The machine jams	Thread is caught in the hook.	Remove the upper thread and bobbin case, turn the handwheel backwards and forwards by hand and remove the thread. Lubricate as described.

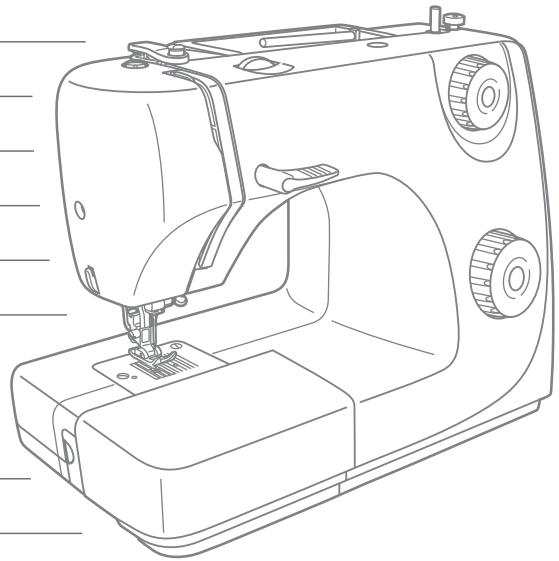

021V880103(英) Jun/05
SINGER 8280(8280A)